Read before installation.

Soft luggage rack

KTM 390 Adventure 25-

ID:3100875

	Steel 8.8	Steel 10.9	Steel 12.9
M4	2,7	4	4.9
M5	5,5	8	9.8
M6	9,7	13,7	16
M8	23	33	40
M10	47	66	83
M12	80	116	150
M14	130	184	240
M16	196	287	350
M18	270	395	490
M20	385	560	690

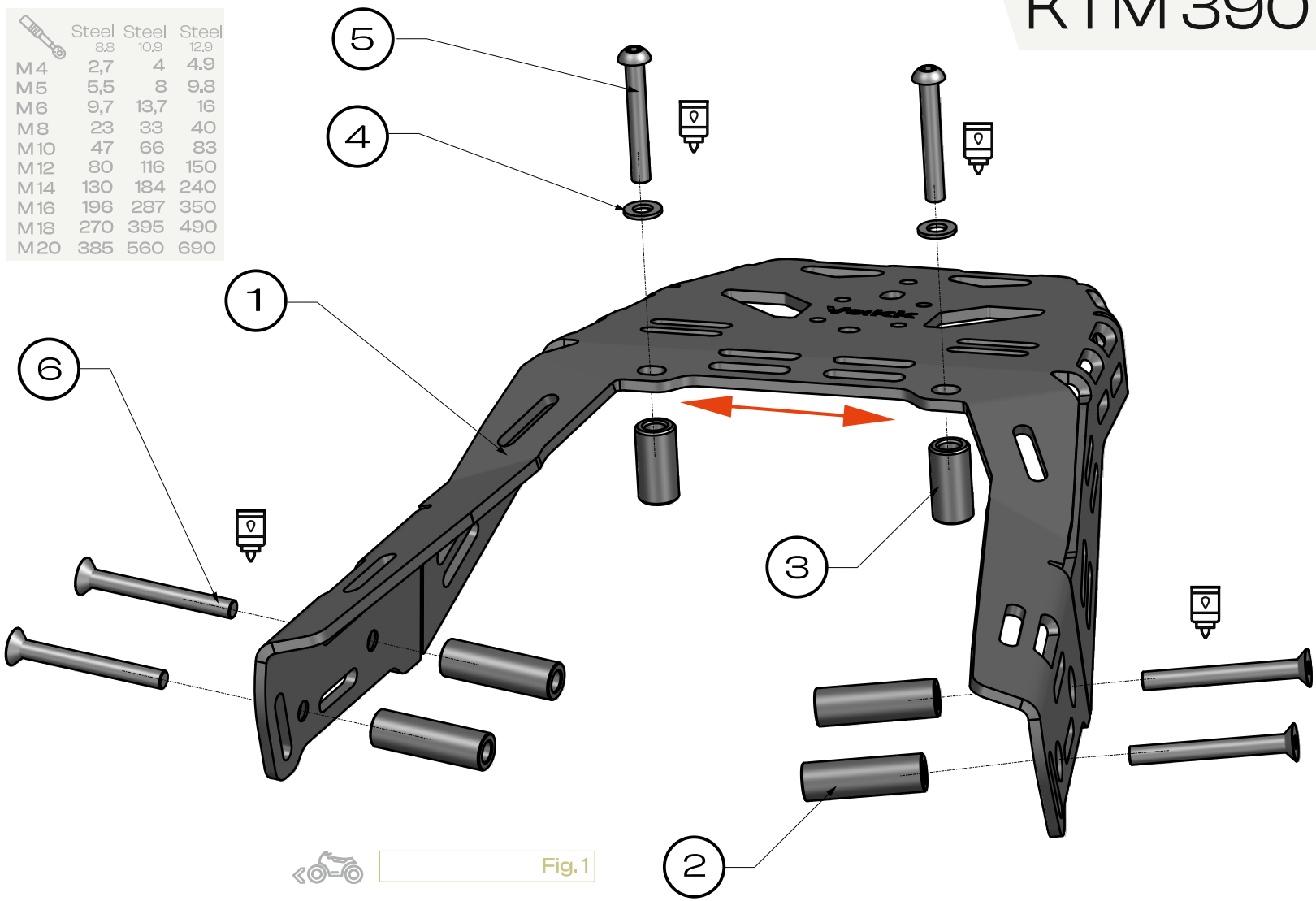

Fig. 1

1 Luggage Plate — 1×

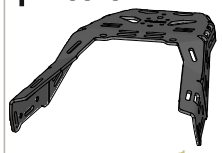

2 Spacer — D16xd9xH51 — 4×



3 Spacer — D17xd9xH33 — 2×



4 Washer — M6-DIN 125 — 2×



5 Bolt — M8x55-DIN 7380 — 2×



6 Bolt — M8x70-DIN 7991 — 4×

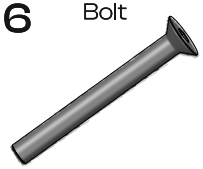

All bolts have to be finaly tighten after installation all parts on vehicle.

one person — use a medium-stregth — tighten with torque — OEM Original Equipment Manufacturer

Yakk EXP

assembly instructions

yakkexp.com

EXPLORE POSSIBILITIES

Read before installation.
All bolts have to be finaly tighten after install ation all parts on vehicle.

follow yakkexp join #yakkherd

1. Remove the caps or unscrew the bolts and remove the accessories. **[Fig. 2]**

2. Instal the spacers [3]. **[Fig. 1] , [Fig. 3]**

3. Install the Luggage Plate [1] and loosely fasten the rear using bolts [5] with washers [4]. Use a medium-strength adhesive.**[Fig. 1] , [Fig. 4], [Fig. 5]**

4. Place spacers [2] between the Luggage Plate [1] and the mounting points on both front sides, then loosely fasten them using bolts [6]. Use a medium-strength adhesive. Repeat this procedure on the opposite side of the motorcycle. **[Fig. 4], [Fig. 5]**

5. Center the assembly and tighten all bolts to the specified torque. **[Fig. 1], [Fig. 5]**

3 Spacer	1 Luggage Plate	5 Bolt	4 Washer	2 Spacer	6 Bolt
	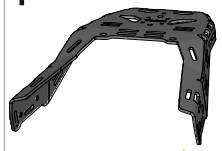				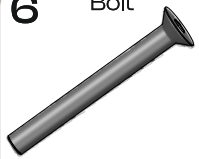
D17xd9xH33 2x	1x	M8x55-DIN 7380 2x	M6-DIN 125 2x	D16xd9xH51 4x	M8x70-DIN 7991 4x

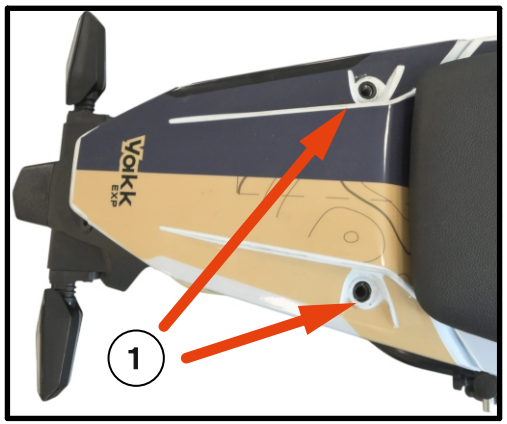

Fig. 2

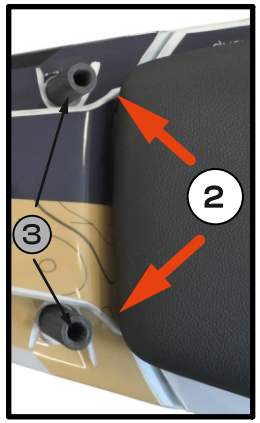

Fig. 3

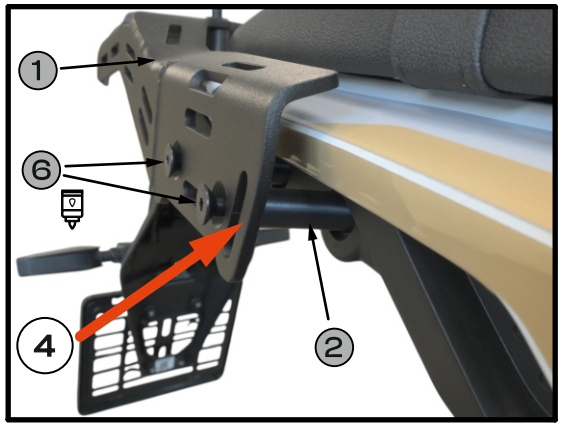

Fig. 4

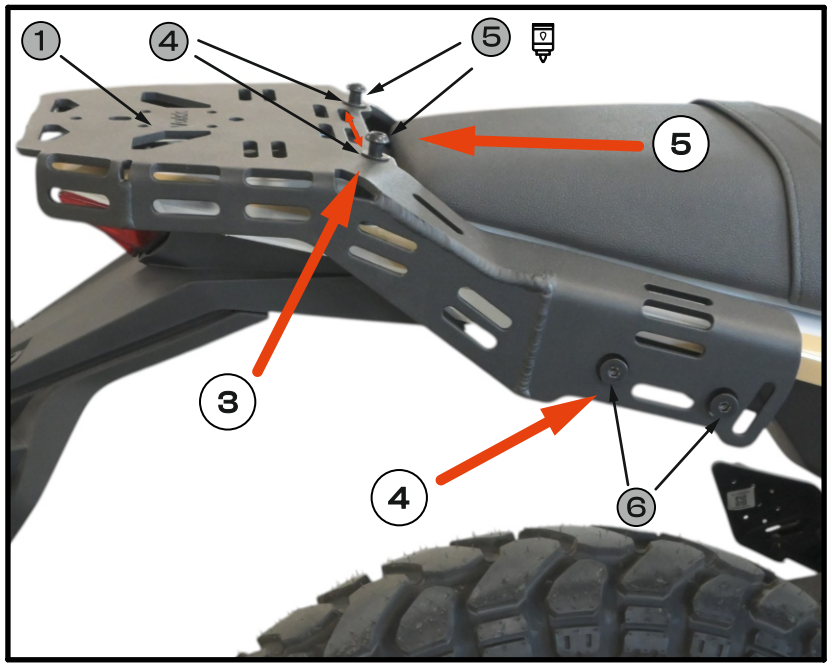

Fig. 5

one person | use a medium-stregth | tighten with torque | OEM Original Equipment Manufacturer

Vakk EXP

assembly instructions

yakkexp.com

EXPLORE POSSIBILITIES