Read before installation.

All bolts have to be finaly tighten after installation all parts on vehicle.

Soft luggage rack

BMW 900 GS

ID:3140729

	Steel 8.8	Steel 10.9	Steel 12.9
M4	2,7	4	4.9
M5	5,5	8	9.8
M6	9,7	13,7	16
M8	23	33	40
M10	47	66	83
M12	80	116	150
M14	130	184	240
M16	196	287	350
M18	270	395	490
M20	385	560	690

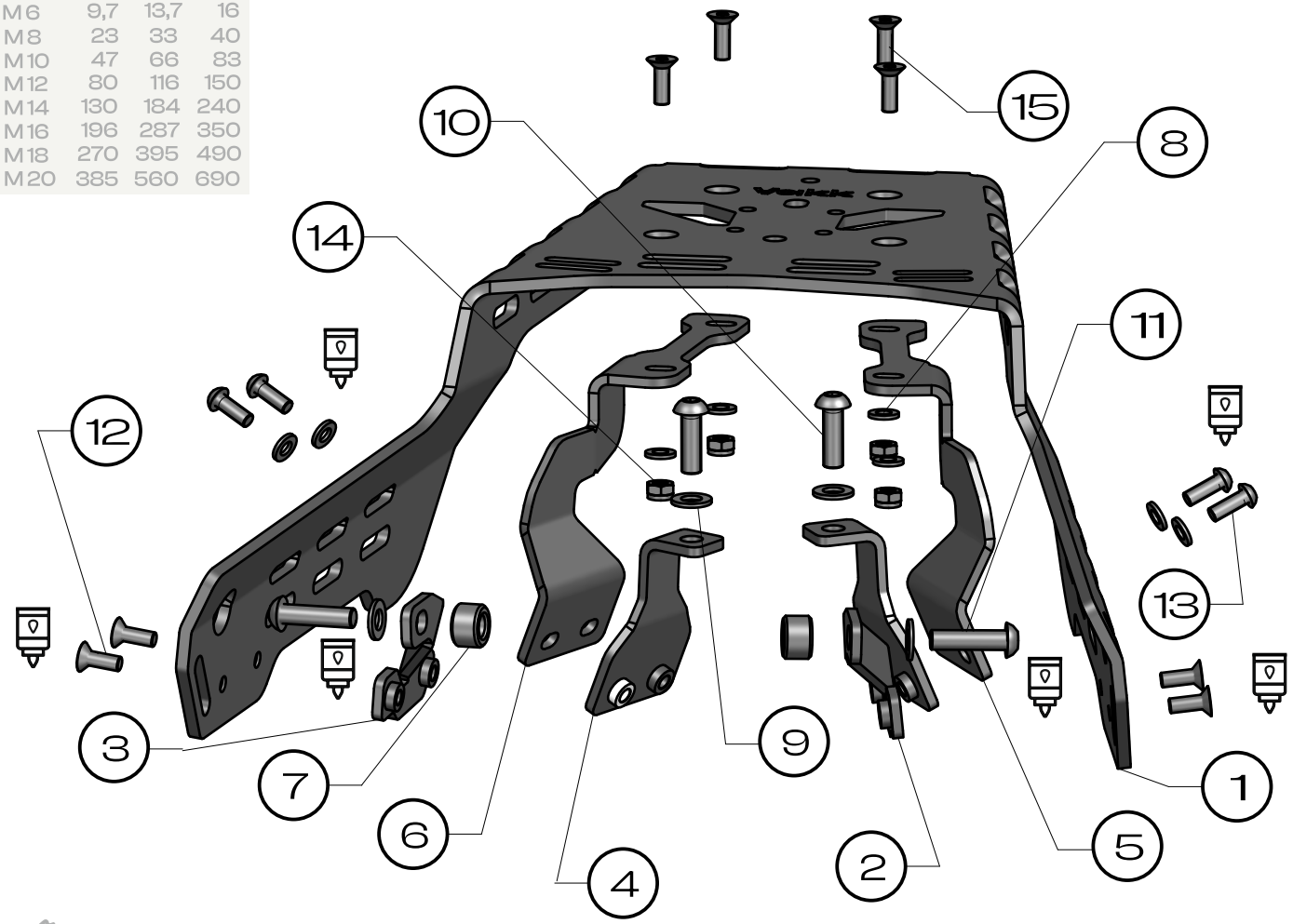

Fig. 1

1	Luggage Plate	1x
2	Front left bracket	1x
3	Front right bracket	1x
4	Rear bracket	2x
5	Left support	1x
6	Right support	1x
7	Spacer D17xd9xH11	2x
8	Washer M6-DIN 125	8x
9	Washer M8-DIN 125	4x
10	Bolt M8x25-DIN 7380	2x
11	Bolt M8x30-DIN 7380	2x
12	Bolt M6x16 -DIN 7991	4x
13	Bolt M6x16-DIN 7380	4x
14	Nut M6-DIN 985	4x
15	Bolt M6x18 -DIN 7991	4x

one person — use a medium-stregth — tighten with torque — OEM Original Equipment Manufacturer

Yakk EXP

assembly instructions

yakkexp.com

EXPLORE POSSIBILITIES

!!! Initially, attach the screws loosely.
After assembling everything together, tighten them with the appropriate force.

follow yakkexp join #yakkherd

1. Remove the motorcycle seat , the rear plastic cover. **[Fig. 2]**
2. Fasten the rear bracket **[4]** using bolt **[10]** with washer **[9].** Use a medium threadloccker . Repeat this procedure on the opposite side.**[Fig. 2], [Fig. 3].**
3. Loosely fasten the front right and left bracket **[2], [3]** using bolt **[11]** with washer **[9],** and spacer **[7].** Use a medium threadloccker .
Repeat this procedure on the opposite side. **[Fig. 2], [Fig. 3].** **4.** Reinstal and srew the rear plastic cover. **[Fig. 3].**
5. Fasten the left and right supprt **[5], [6]** using bolt **[13]** with washer **[9]** to brackets. Use a medium threadloccker .
Repeat this procedure on the opposite side. **[Fig. 3].**

7 Spacer

D17xd9xH11 2×

9 Washer

M8-DIN 125 4×

10 Bolt

M8x25-DIN 7380 2×

11 Bolt

M8x30-DIN 7380 2×

5 Left support

1×

6 Right support

1×

13 Bolt

M6x16-DIN 7380 4×

2 Front left bracket

1×

3 Front right bracket

1×

4 Rear bracket

2×

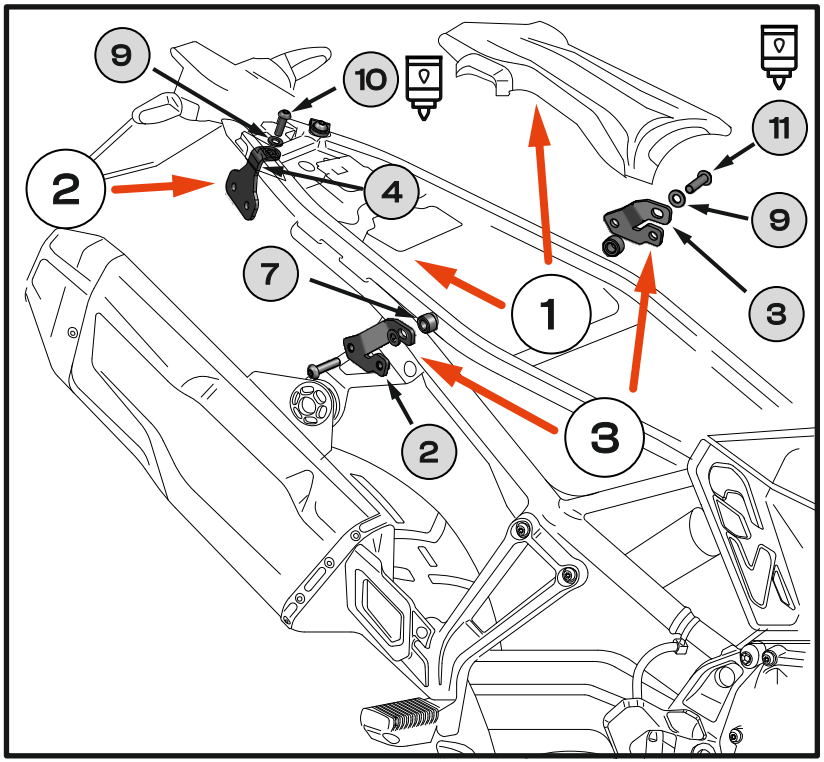

Fig. 2

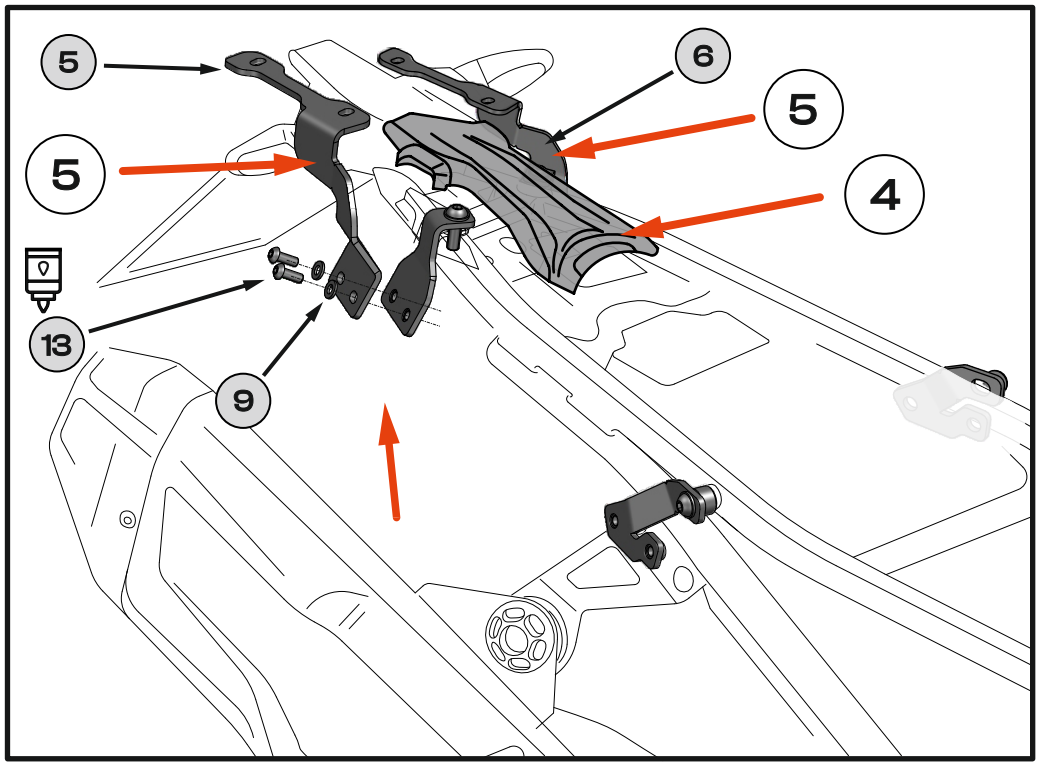

Fig. 3

!!! Initially, attach the screws loosely.
After assembling everything together, tighten them with the appropriate force.

follow yakkexp join #yakkherd

6. Install the Luggage plate **[1]** and loosely fasten it to supports **[5]** and **[6]** using bolts **[15]**, washers **[8]**, and nuts **[16]** . **[Fig. 1] , [Fig. 4]**

7. At the front, loosely fasten the Luggage plate **[1]** using bolts **[12]** to brackets **[2]** and **[3]**. Use a medium-strength adhesive. **[Fig. 1], [Fig. 4].**

8. Tighten all bolts to the specified torque **[Fig. 1], [Fig. 5].**

9. Install the seat. **[Fig. 5].**

1 Luggage Plate	8 Washer	14 Nut	15 Bolt	12 Bolt
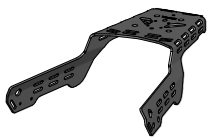				
1x	M6-DIN 125 8x	M6-DIN 985 4x	M6x18 -DIN 7991 4x	M6x16 -DIN 7991 4x

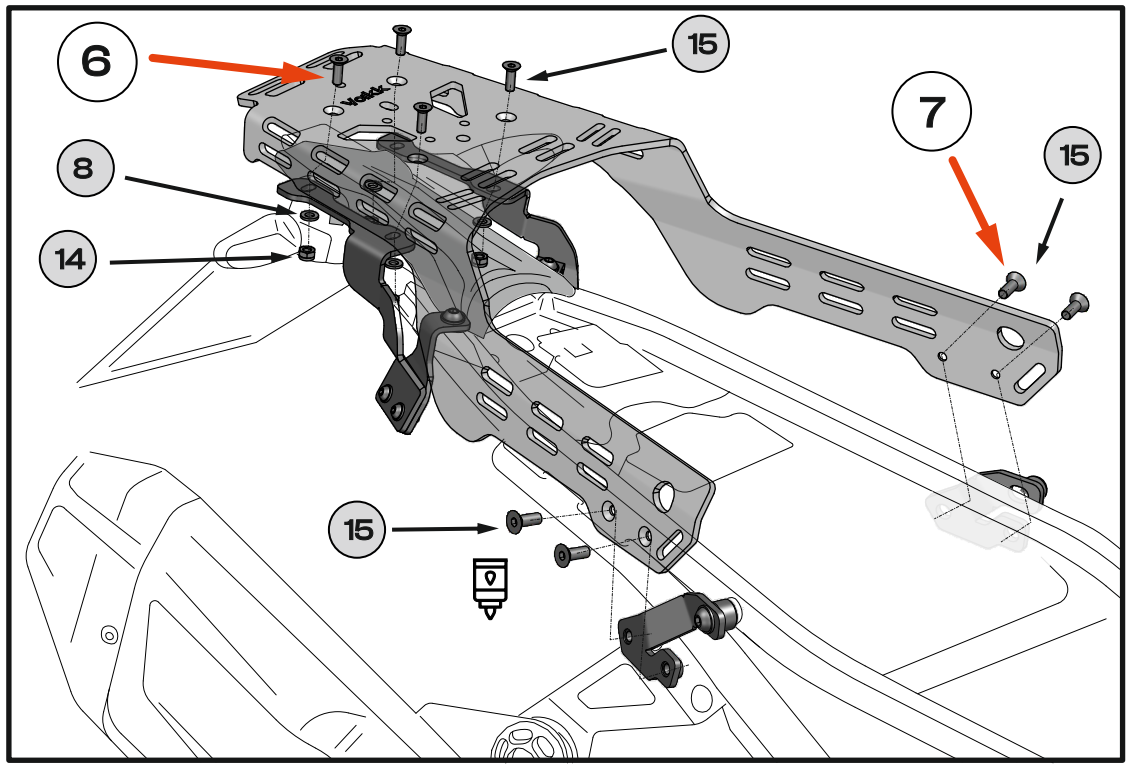

Fig. 4

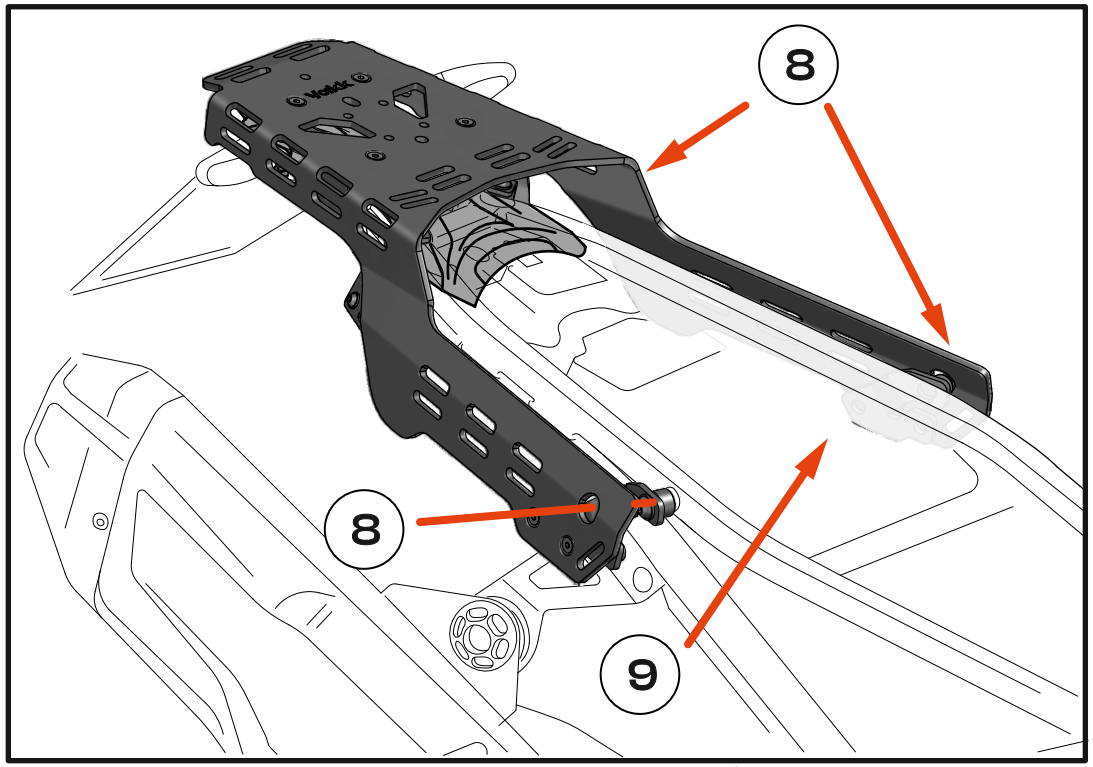

Fig. 5