Read before installation.

All bolts have to be finaly tighten after installation all parts on vehicle.

Soft luggage rack

CF Moto 800 MT-X 25

ID:3121123

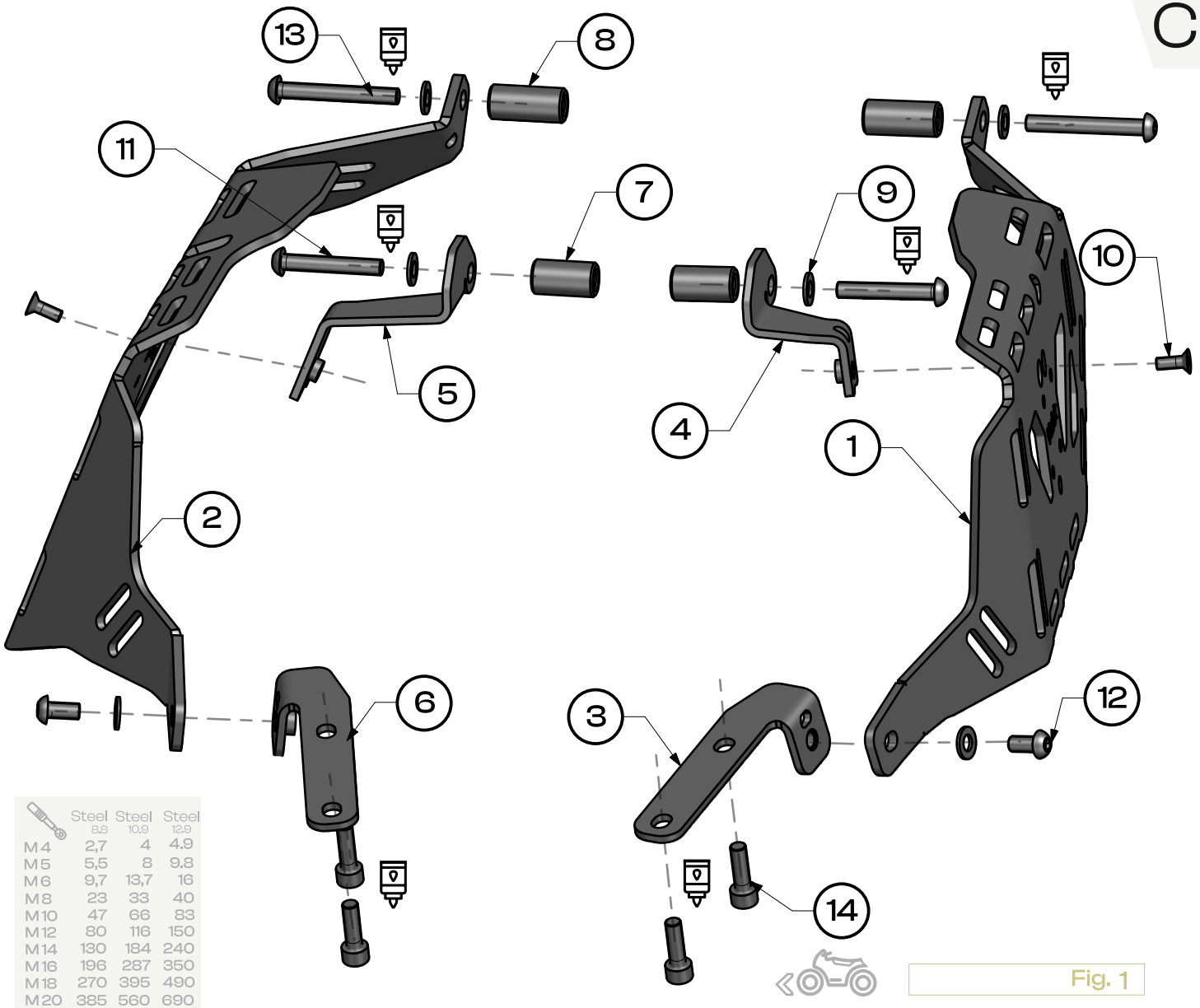

	Steel 8.8	Steel 10.9	Steel 12.9
M4	2,7	4	4.9
M5	5,5	8	9.8
M6	9,7	13,7	16
M8	23	33	40
M10	47	66	83
M12	80	116	150
M14	130	184	240
M16	196	287	350
M18	270	395	490
M20	385	560	690

Fig. 1

1 Left luggage rack — 1x

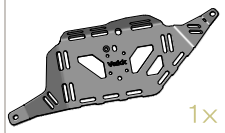

2 Right luggage rack — 1x

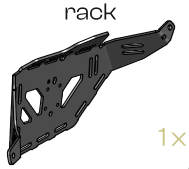

3 Footpeg left bracket — 1x

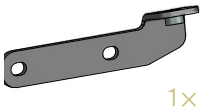

4 Left bracket — 1x



5 Rignt bracket — 1x

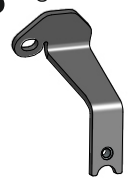

6 Footpeg right bracket — 1x

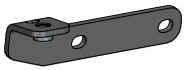

7 Spacer — D17 x d9x H31 — 2x



8 Spacer — D17 x d9 x H37 — 2x



9 Washer — M8-DIN 125 — 6x



10 Bolt — M6x16 -DIN 7991 — 2x



11 Bolt — M8x50-DIN 7380 — 2x



12 Bolt — M8x16 -DIN 7380 — 2x



13 Bolt — M8x60 -DIN 7380 — 2x



14 Bolt — M8x25 -DIN 912 — 4x



one person — use a medium-stregth — tighten with torque — OEM Original Equipment Manufacturer

Yakk EXP

assembly instructions

yakkexp.com

EXPLORE POSSIBILITIES

!!! Initially, attach the screws loosely.
After assembling everything together, tighten them with the appropriate force.

follow yakkexp join #yakkherd

1. Remove the seat. **[Fig. 2]**
2. Remove the plastic cover on the right side motocycle. **[Fig. 2]**
3. Unscrew and remove the exhaust. **[Fig. 3]**
4. Unscrew and remove the passenger footpegs on both sides . **[Fig. 3]**
5. Loosely install and fasten components **[3]** and **[6]** together with the passenger footrests using bolts **[14]** on both sides of the motorcycle. **[Fig. 1], [Fig. 4, [Fig. 5].** Use a medium - trenght threadloccker
6. Resinstall and fasten the exhaust. **[Fig. 4]**
7. Resinstall and fasten plastic cover. **[Fig. 4]**

3 Footpeg left bracket 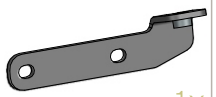 1×	6 Footpeg right bracket 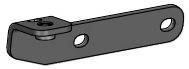 1×	14 Bolt  M8x25 -DIN 912 4×

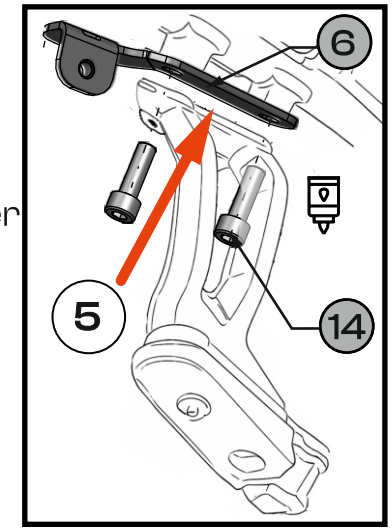

Fig. 5

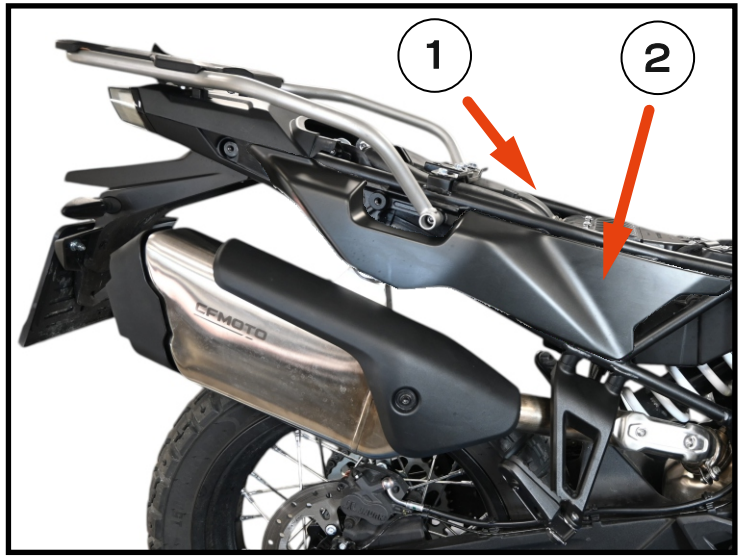

Fig. 2

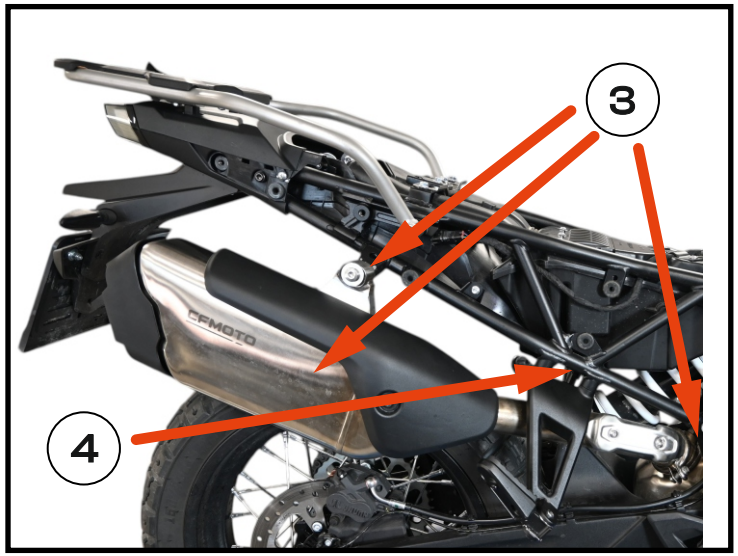

Fig. 3

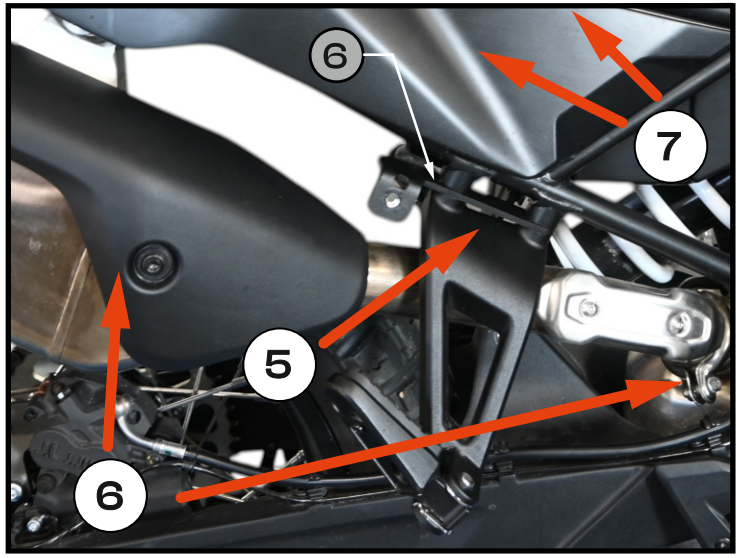

Fig. 4

!!! Initially, attach the screws loosely.
After assembling everything together, tighten them with the appropriate force.

8. Loosely install and fasten left and right bracket **[4], [5]** on both sides of the motorcycle using washers **[9]**, bolts **[11]** and spacer slave **[7]. [Fig. 6], [Fig. 7] , [Fig. 8]**

Apply medium-strength threadlocker.

4 Left bracket  1x	5 Rignt bracket 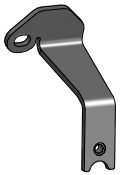 1x	7 Spacer  D17 x d9x H31 2x	9 Washer  M8-DIN 125 4x	11 Bolt  M8x50-DIN 7380 2x

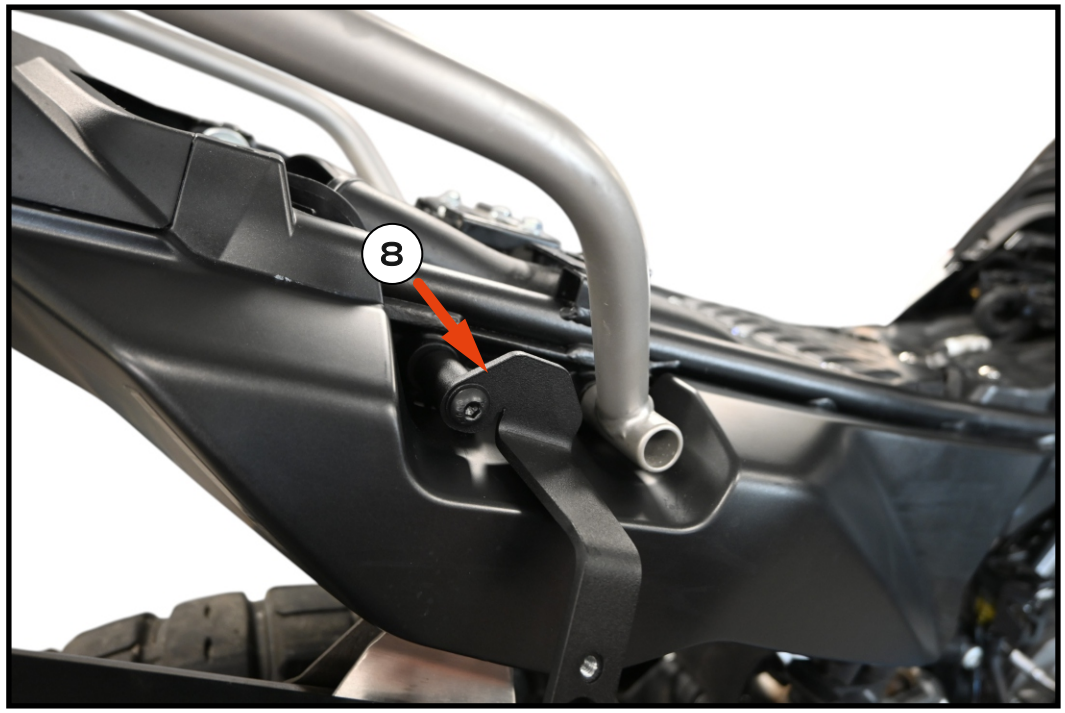

Fig. 6

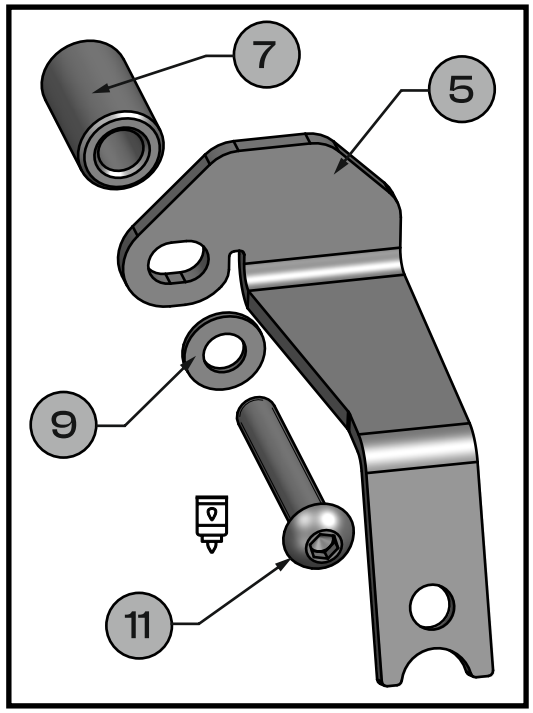

Fig. 7

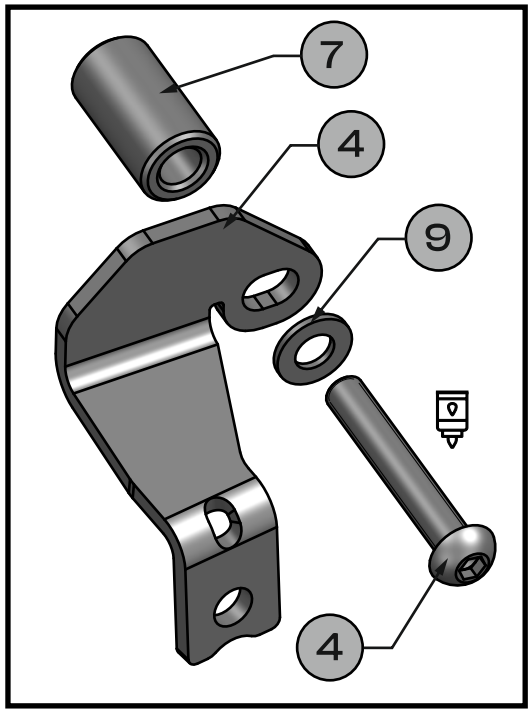

Fig. 8

!!! Initially, attach the screws loosely.
After assembling everything together, tighten them with the appropriate force.

follow yakkexp join #yakkherd

8. Loosely install and fasten left and right luggage racks **[2], [1]** at the rear on both sides of the motorcycle using spacer sleeves **[8]**, and bolts **[13]** through washers **[9]. [Fig. 9], [Fig. 10]**

9. Loosely fasten the left and right luggage racks **[2], [1]** at the middle mounting point using bolt **[10]. [Fig. 10]**

10. Loosely fasten the left and right luggage racks **[2], [1]** at the front using bolt **[11]** through washers **[9]. [Fig. 10]**
Apply medium-strength threadlocker. **11.** Resnstall and fasten the seat.

12. Align the **soft luggage racks** with the motorcycle centerline. **Tighten all bolts to the specified torque. [Fig.9],**

1 Left luggage rack  1x	2 Right luggage rack  1x	3 Footpeg left bracket 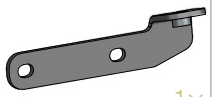 1x	8 Spacer  D17 x d9 x H37 2x	9 Washer  M8-DIN 125 2x	10 Bolt  M6x16 -DIN 7991 2x	11 Bolt  M8x50-DIN 7380 2x	13 Bolt  M8x60 -DIN 7380 2x

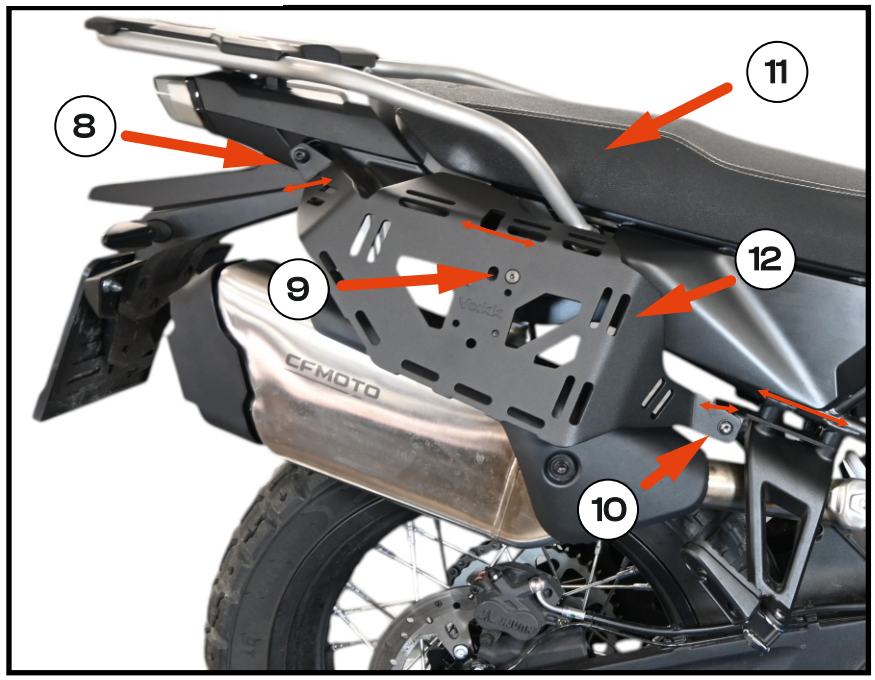

Fig. 9

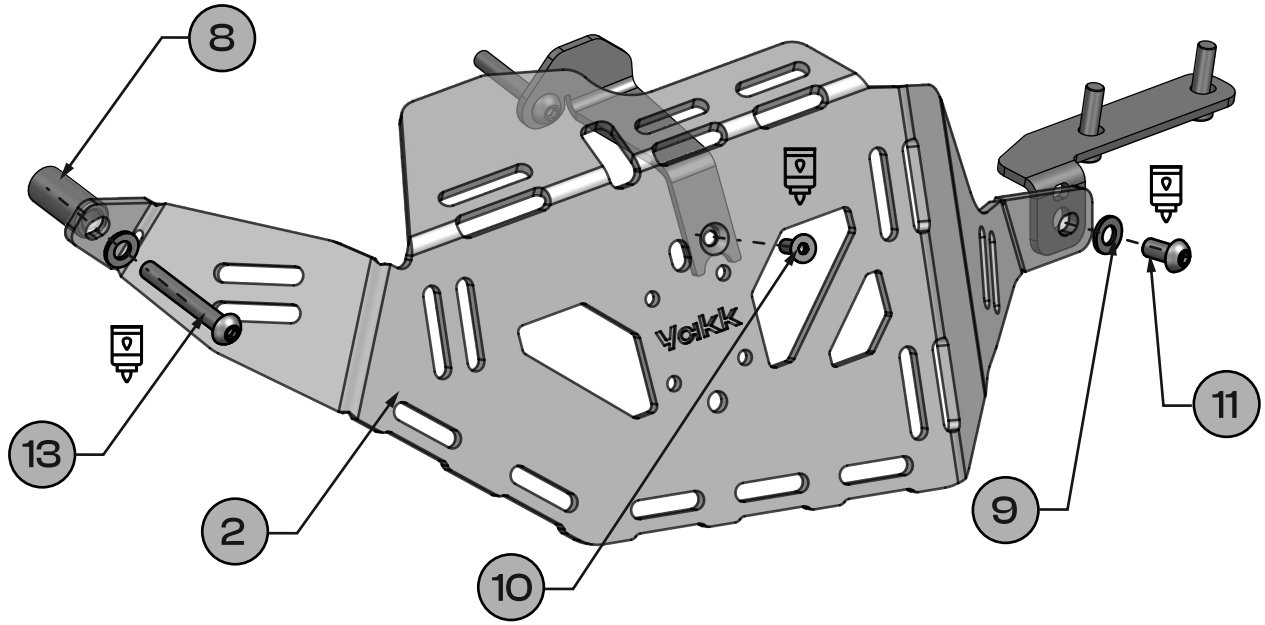

Fig. 10

Before installation, read all instructions for each product.

Soft luggage rack / Soft luggage side racks

CF Moto 800 MT-X 25

ID:3121123 / ID: 3121124 / ID:2951911

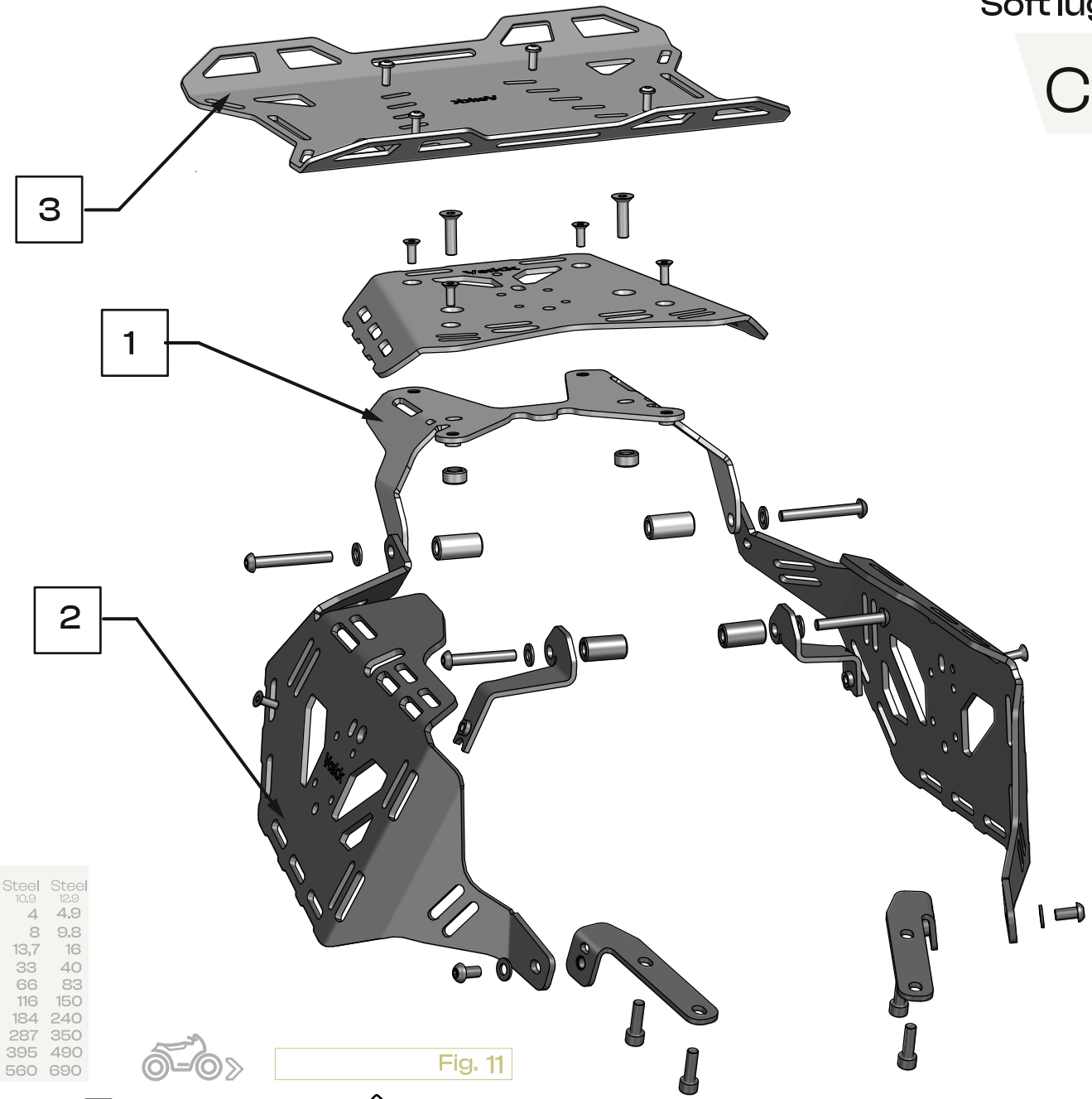

Fig. 11

	Steel 8.8	Steel 10.9	Steel 12.9
M4	2,7	4	4.9
M5	5,5	8	9.8
M6	9,7	13,7	16
M8	23	33	40
M10	47	66	83
M12	80	116	150
M14	130	184	240
M16	196	287	350
M18	270	395	490
M20	385	560	690

1 Yaak exp ID: 33121124

Parts used from product

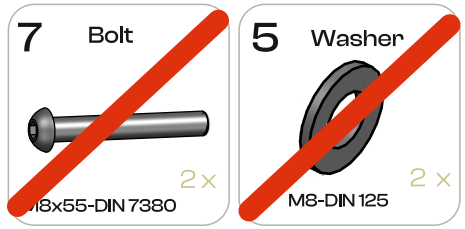

2 Yaak exp ID: 33121123

Parts used from product



3 Yaak exp ID: 2951911

one person | use a medium-stregth | tighten with torque | OEM Original Equipment Manufacturer