Read before installation

All bolts have to be finally tighten after installation all parts on vehicle.

Side pannier luggage rack

CF Moto 800 MT-X 25

ID:3121122

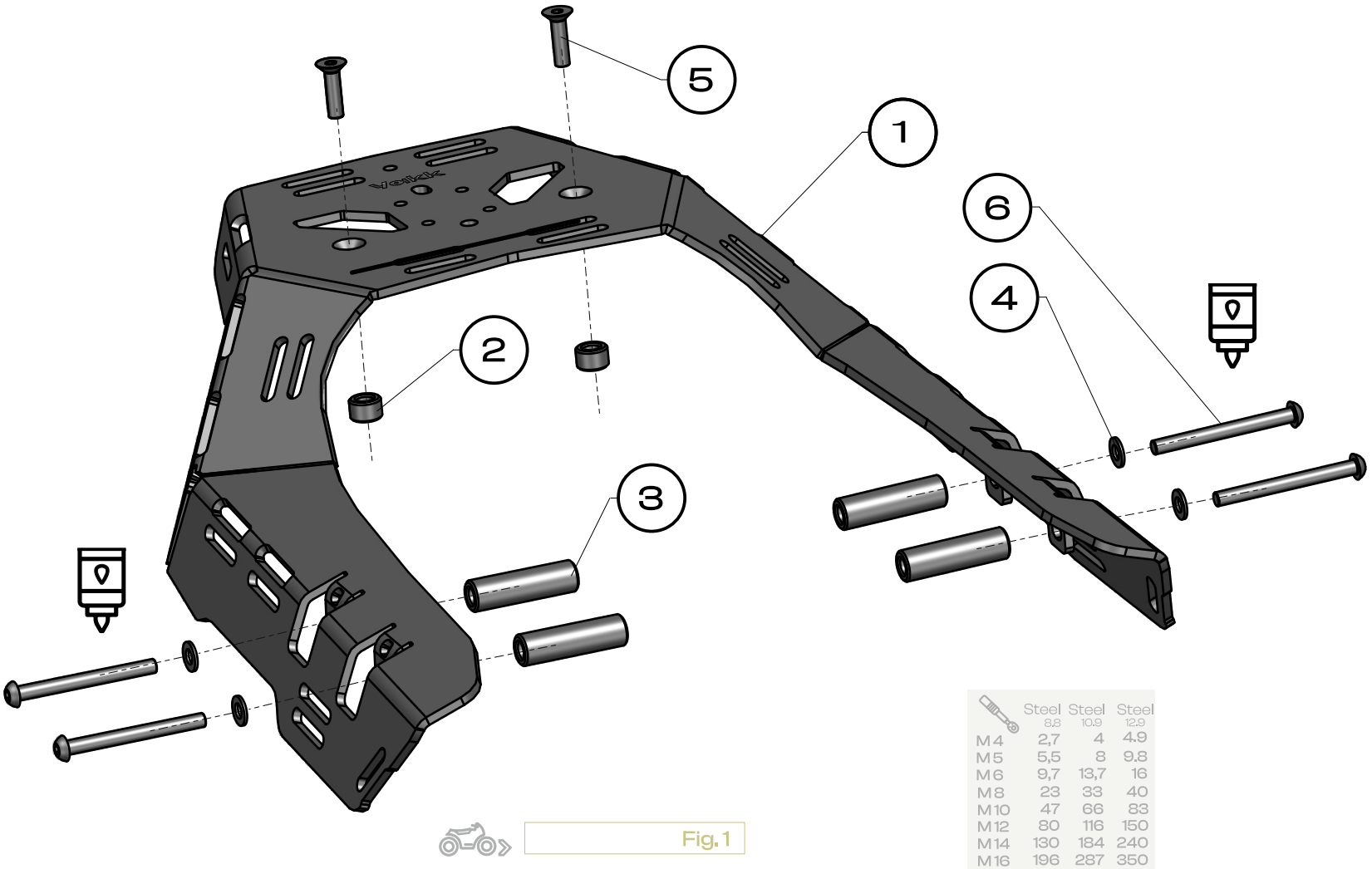

Fig. 1

	Steel 8.8	Steel 10.9	Steel 12.9
M4	2,7	4	4.9
M5	5,5	8	9.8
M6	9,7	13,7	16
M8	23	33	40
M10	47	66	83
M12	80	116	150
M14	130	184	240
M16	196	287	350
M18	270	395	490
M20	385	560	690

1 Luggage plate



1x

2 Spacer



D17xd9xH11 2x

3 Spacer



D17xd9xH59 4x

4 Washer



M8-DIN 7349 4x

5 Bolt



M8x30-DIN 7991 2x

6 Bolt



4x

M8x80 -DIN 7380

one person | use a medium-stregth | tighten with torque | OEM Original Equipment Manufacturer

Vakk EXP

assembly instructions

yakkexp.com

EXPLORE POSSIBILITIES

!!! Initially, attach the screws loosely.
After assembling everything together, tighten them with the appropriate force.

1. Unscrew and remove the plastic cover. **[Fig. 2]**
2. Unscrew and remove the rear grab handle. **[Fig. 3]**
3. Remove the seat and OEM rack. **[Fig. 4], [Fig. 5]**

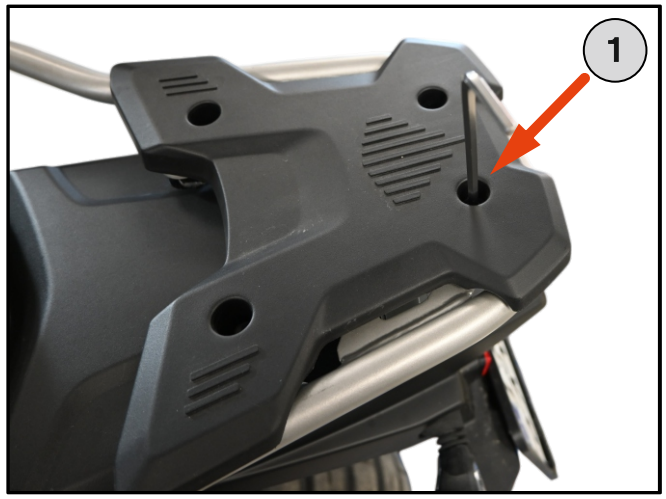

Fig. 2

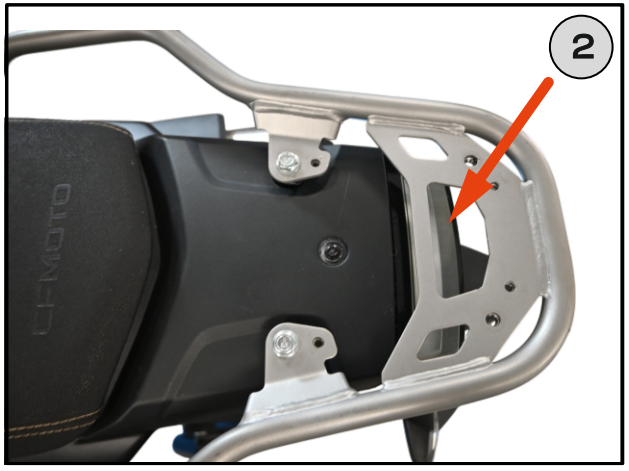

Fig. 3



Fig. 4



Fig. 5

!!! Initially, attach the screws loosely.
After assembling everything together, tighten them with the appropriate force.

4. Insert the spacer sleeves **[2].[Fig. 6]**
5. Instal the Langgage plate. **[Fig. 7] , [Fig. 8]**
6. Instal the spacer sleeves **[3]** and fasten thee langguge plate **[1]** to the motycycle frame using bolts **[6]**, and washer **[4]**. **[Fig. 7] , [Fig. 8]**
7. Fasten theLanggage plate using bolts **[5]** . **[Fig. 7] , [Fig. 8]**
Use medium-strengt adhesive.
8. Reinstall the seat. **[Fig. 8]**

1 Luggage plate	2 Spacer	3 Spacer	4 Washer	5 Bolt	6 Bolt
					
1×	D17xd9xH11 2×	D17xd9xH59 4×	M8-DIN 7349 4×	M8x30-DIN 7991 2×	M8x80 -DIN 7380 4×

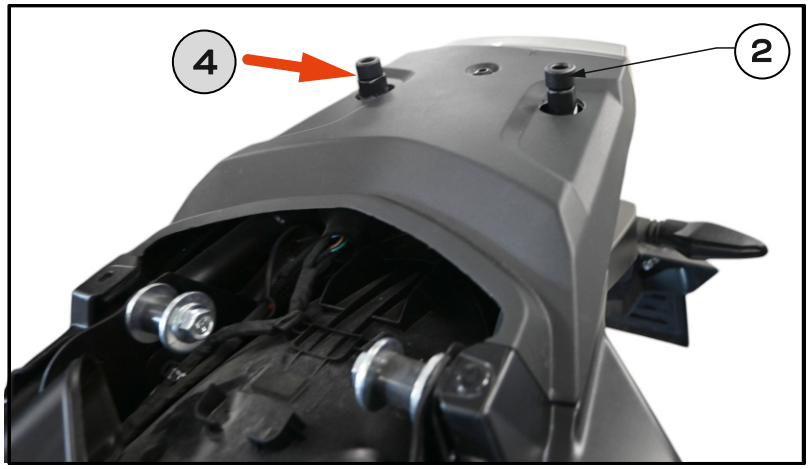

Fig. 6

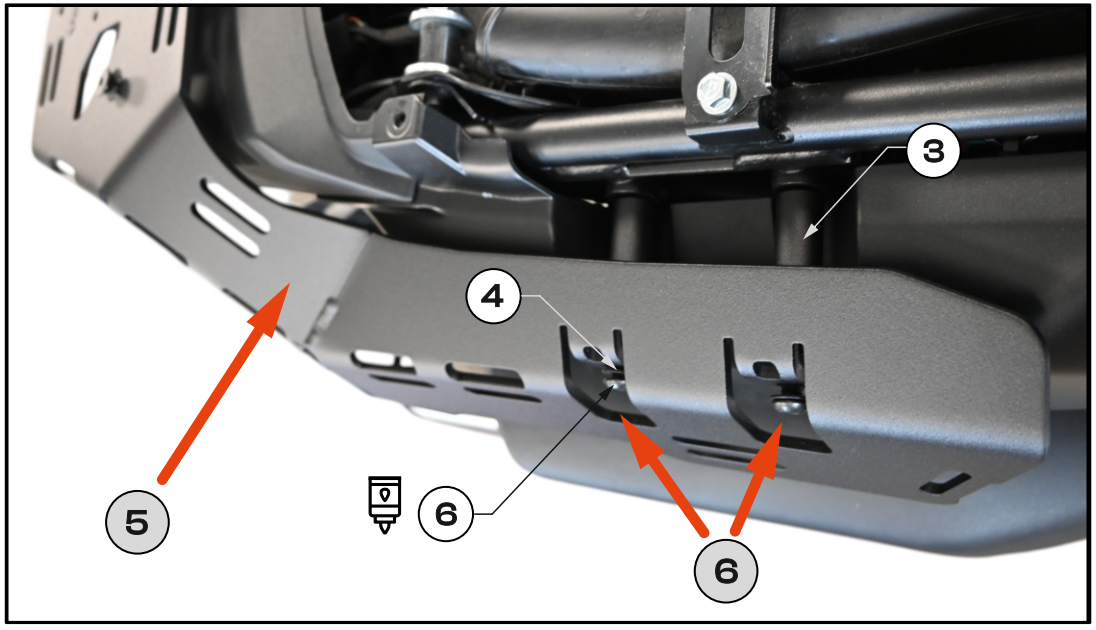

Fig. 7

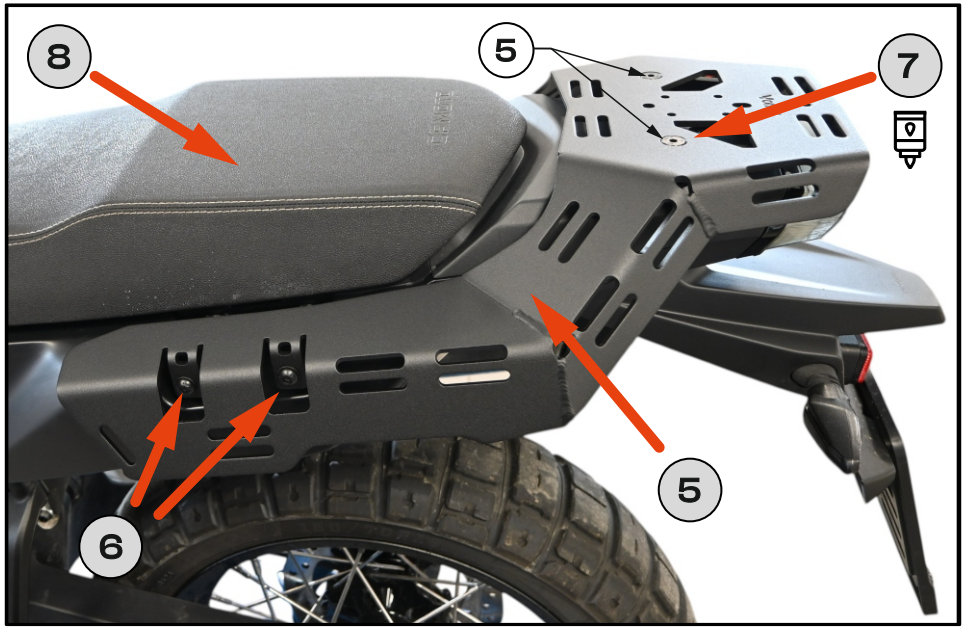

Fig. 8