Full crash Skid plate

CF Moto 800 MT-X

ID:3121121

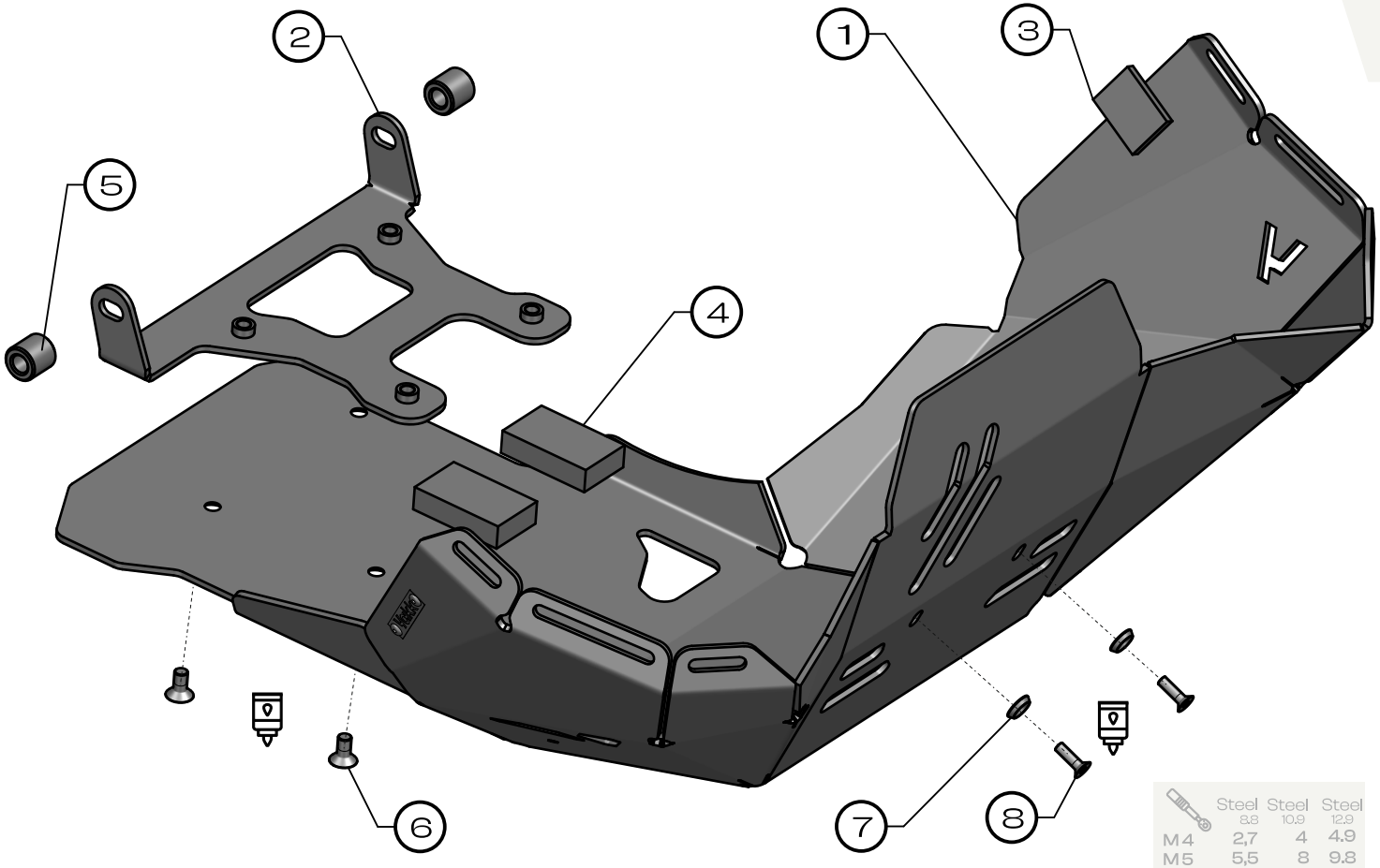

Fig. 1

	Steel 8.8	Steel 10.9	Steel 12.9
M4	2,7	4	4.9
M5	5,5	8	9.8
M6	9,7	13,7	16
M8	23	33	40
M10	47	66	83
M12	80	116	150
M14	130	184	240
M16	196	287	350
M18	270	395	490
M20	385	560	690

1 Engine guard

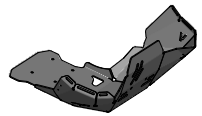

1x

2 Rear bracket



1x

3 Rubber buffer



40x30x6 2x

4 Rubber buffer

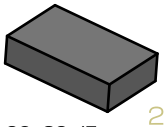

60x36x15 2x

5 Spacer



d11xD21xH21 2x

6 Bolt



M8x16 -DIN 7991 4x

7 Washer



M6 -DIN 9081 2x

8 Bolt



M6x20 -DIN 7991 2x

Read before installation.

Before installing the Yakk exp Skid plate remove the original engine cover.

All bolts have to be finaly tighten after installation all parts on vehicle.

one person | use a medium-stregth | tighten with torque | OEM Original Equipment Manufacturer

Yakk EXP

assembly instructions

yakkexp.com

EXPLORE POSSIBILITIES

Read before installation.

All bolts have to be finaly tighten after install

1. Unscrew the bolts and remove the orginal engine cover - OEM **[Fig. 2]**
2. Unscrew the indicated bolt securing the OEM engine cover on both sides of the motorcycle. **[Fig. 3]**
3. Unscrew the bolts from the front section of the cover. **[Fig. 4]**
4. Unscrew the bolts from the underside of the cover. **[Fig. 5]**
5. Remove the breather hose – disconnect it. **[Fig. 6]**

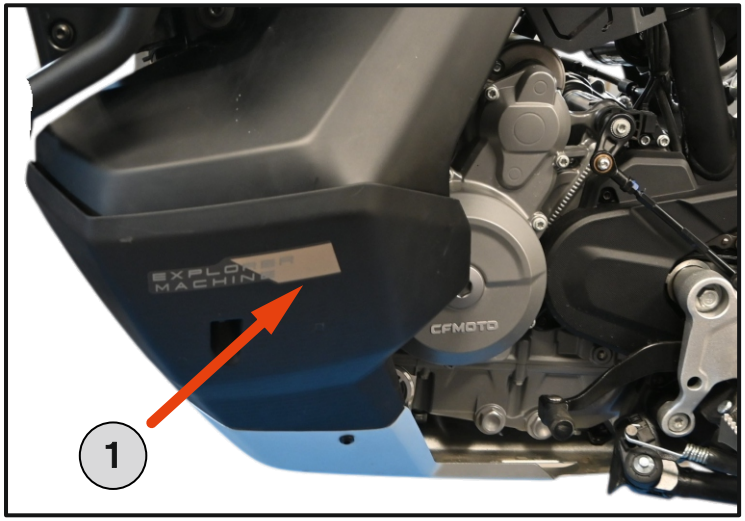

Fig. 2

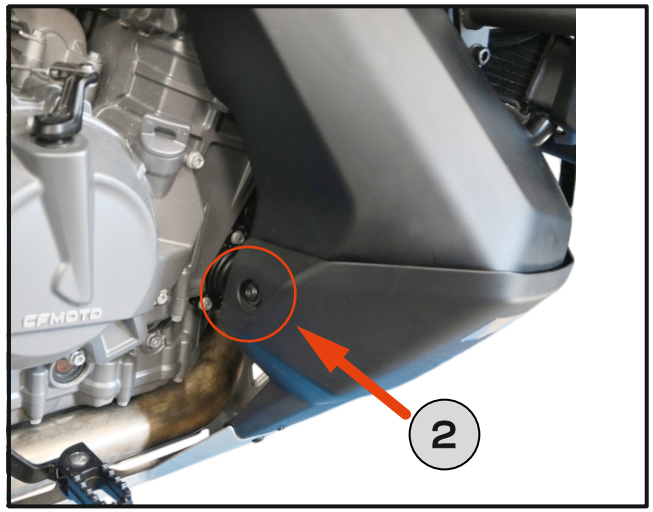

Fig. 3

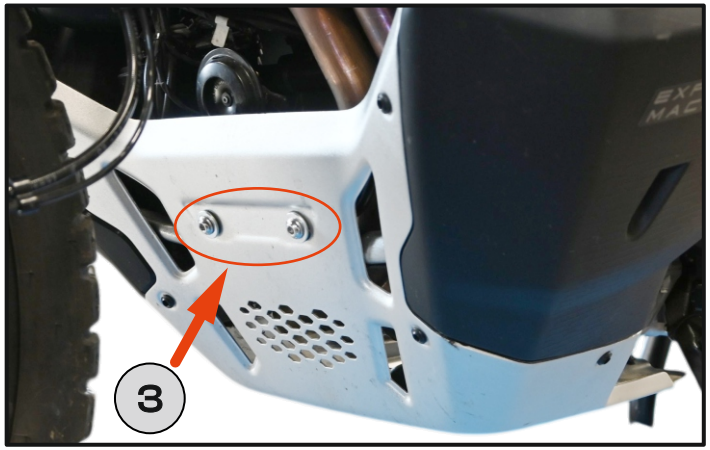

Fig. 4

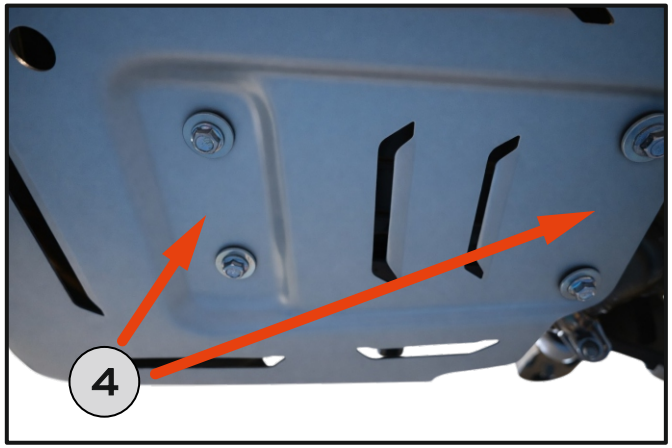

Fig. 5

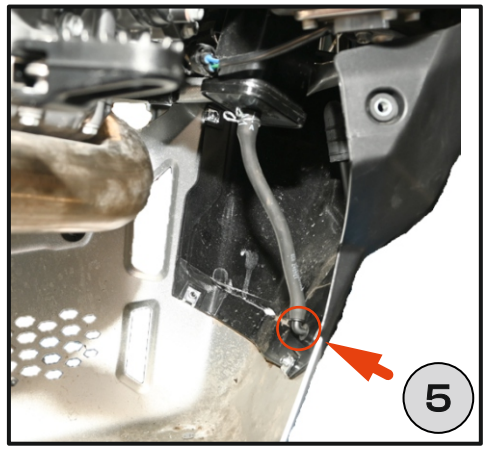

Fig. 6

one person | use a medium-stregth | tighten with torque

OEM Original Equipment Manufacturer

6. Attach rubber buffers **[4]** and **[3]** to the engine guard **[1]** according to the dimensions shown in the drawing. **[Fig. 7], [Fig. 8]**

!!! Degrease the surface before attaching rubber buffers.

7. Unscrew the indicated bolts on both sides of the motorcycle. **[Fig. 9], [Fig. 10]**



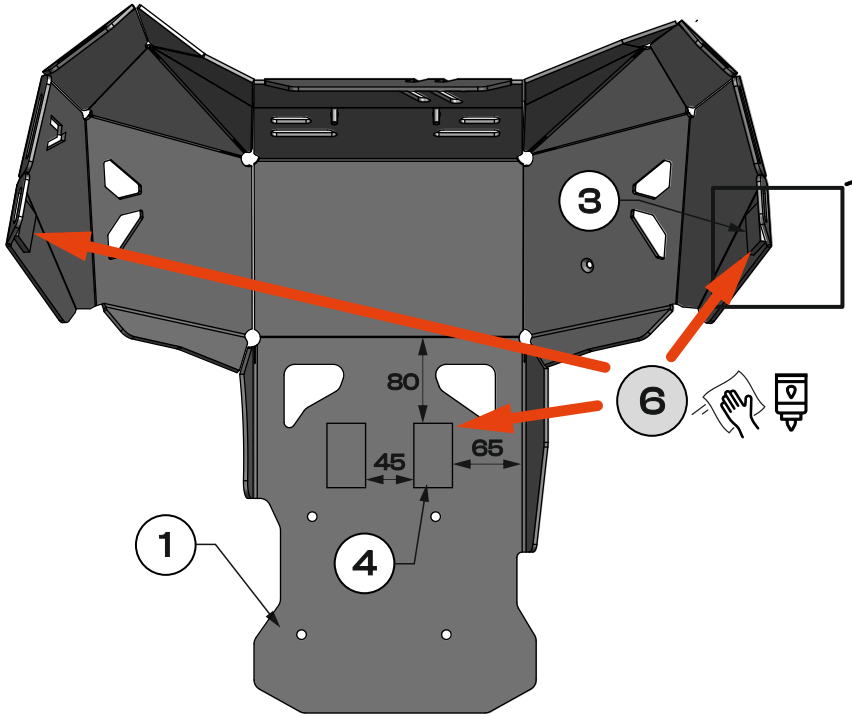

Fig. 7

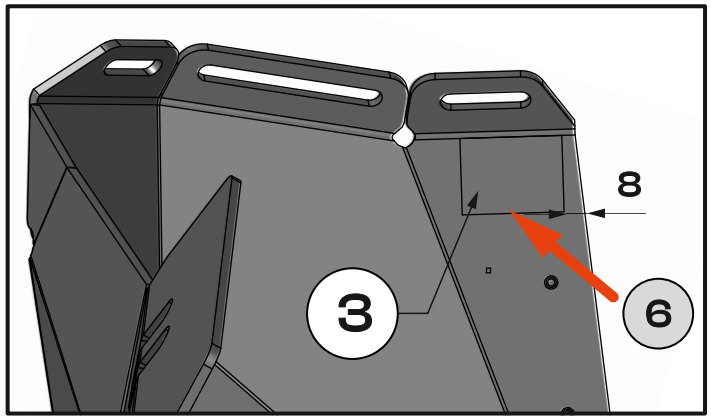

Fig. 8

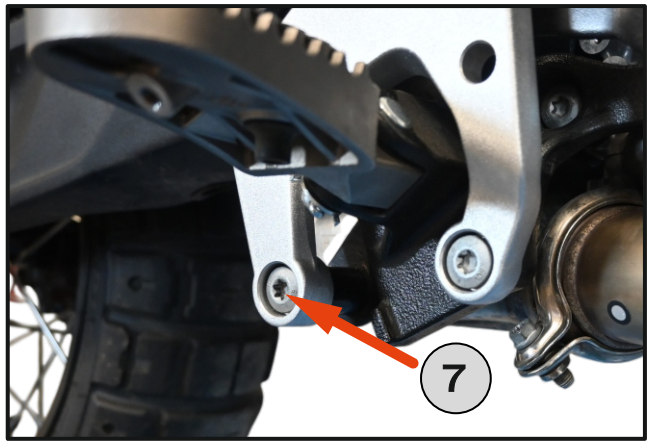

Fig. 9

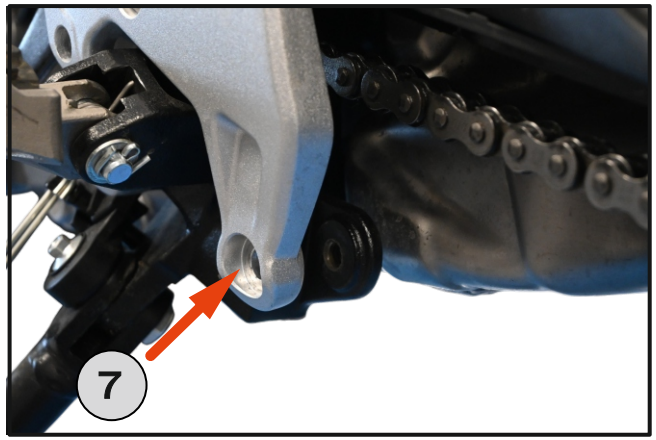

Fig. 10

one person use a medium-stregth tighten with torque **OEM** Original Equipment Manufacturer

8. Loosely fasten the rear bracket **[2]** using the **OEM** bolts with spacers **[5]. [Fig. 11], [Fig. 12]**
   Use a medium-strength adhesive
9. Connect the breather hose. **[Fig. 13]**

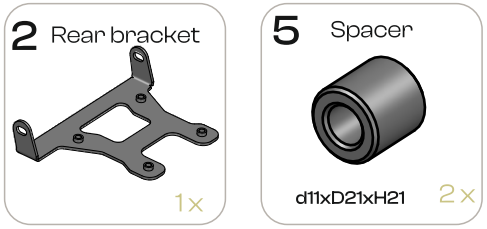

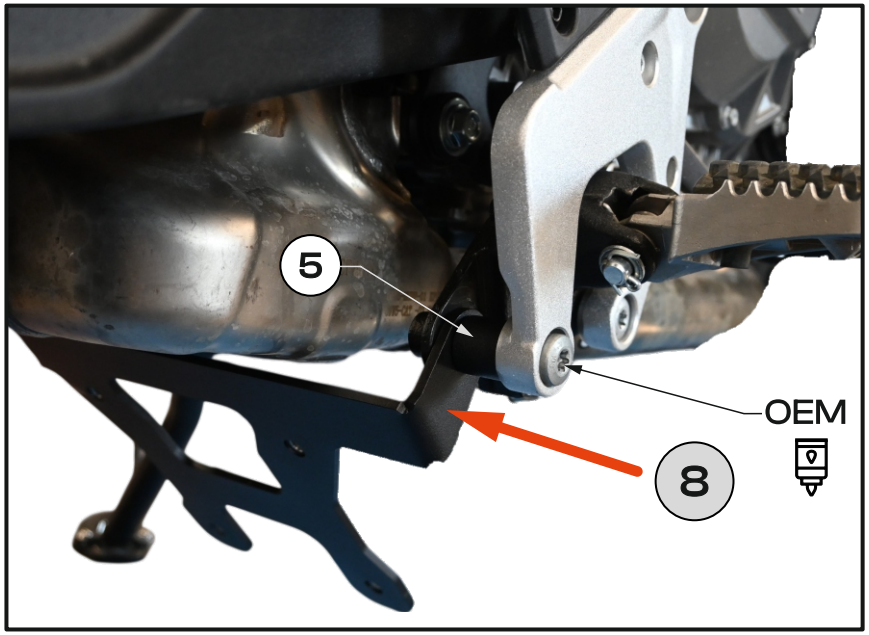

Fig. 11

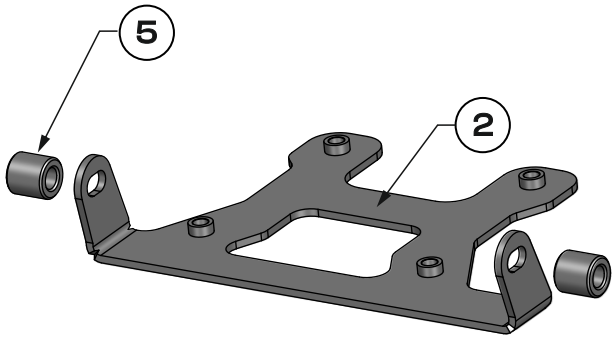

Fig. 12

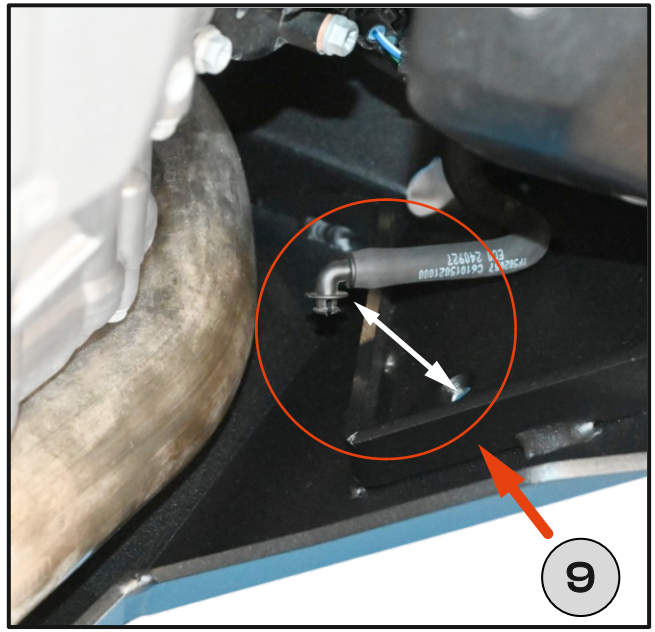

Fig. 13

one person | use a medium-stregth | tighten with torque | **OEM** Original Equipment Manufacturer

10. Leave the OEM mounting bracket in place. Remove it if interference occurs. **[Fig. 14]**
11. Loosely fasten the engine guard **[1]** to the rear bracket **[2]** using bolts **[6]**. **[Fig. 8]**
12. Loosely fasten the engine guard **[1]** from the front to the **OEM** mounting points using bolts **[8]** with washers **[7]**. **[Fig. 16]**
    Use a medium-strength adhesive.

Tighten all bolts to the specified torque for their respective sizes.

6 Bolt



M8x16 -DIN 7991 4x

7 Washer



M8 -DIN 9081 2x

8 Bolt



M6x20 -DIN 7991 2x

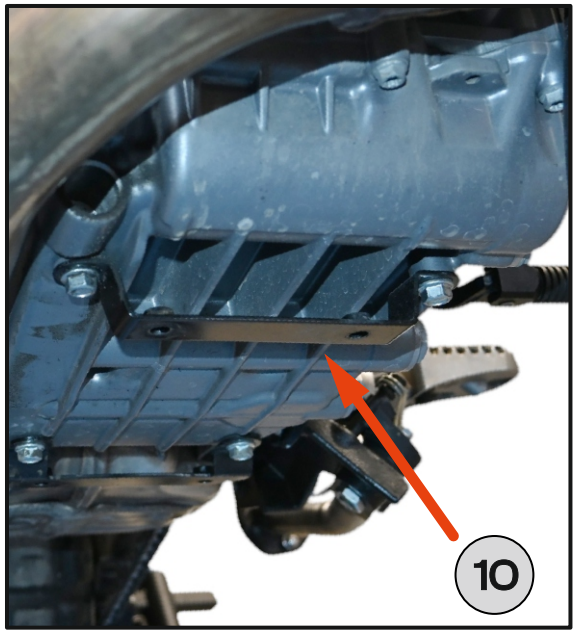

Fig. 14

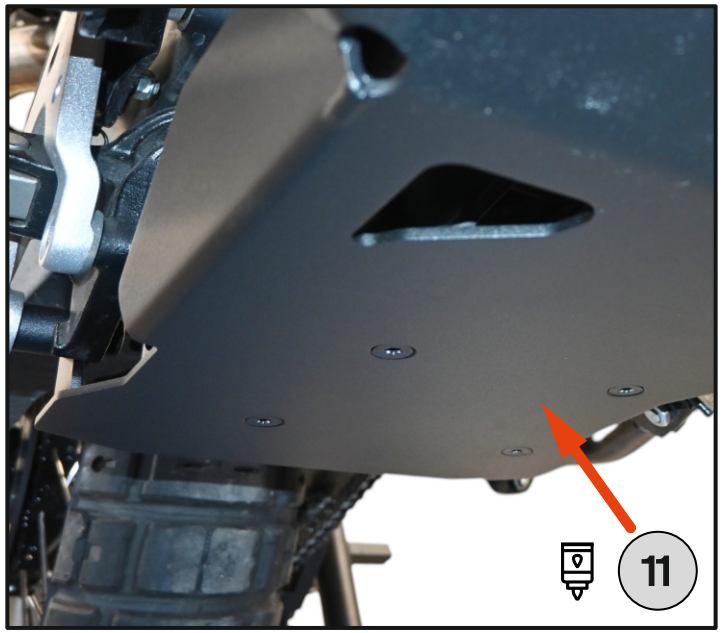

Fig. 15

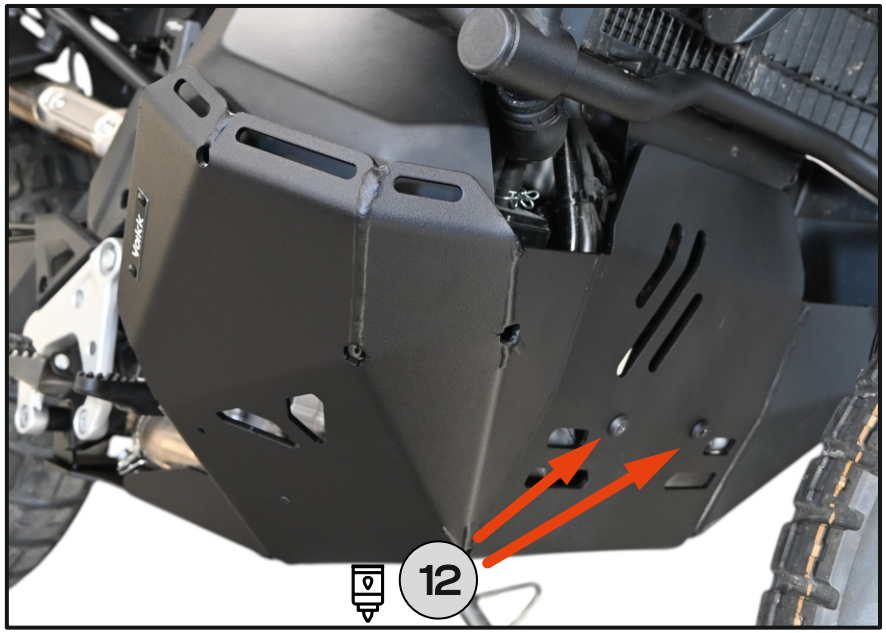

Fig. 16

one person | use a medium-stregth | tighten with torque | **OEM** Original Equipment Manufacturer