Headlight guard

Yamaha T7 Tenere 700 25-

ID:3083065



1 Headlight guard	1×	
2 Frame	1×	
3 Spacer	4×	 d6xD11xh11
4 Bolt	4×	 M5x30 DIN 7380
5 Bolt	4×	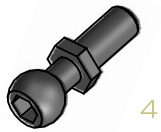
6 Washer	4×	 M5-DIN 125
7 Nut	4×	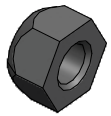 M5-DIN 985
8 Grommets	4×	

Read before installation.
All bolts have to be finaly tighten after installation all parts on vehicle.

one person | use a medium-stregth | tighten with torque | OEM Original Equipment Manufacturer | lublicrate

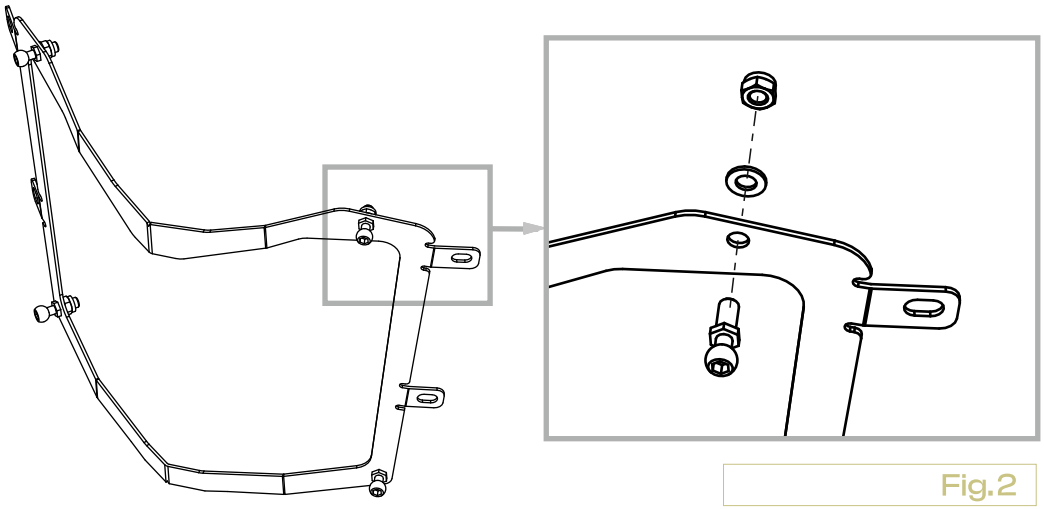

Fig.2

Screw **(5)** fastening the frame **(2)**, tighten through washer **(6)** with nut **(7)**. **[Fig. 2]**

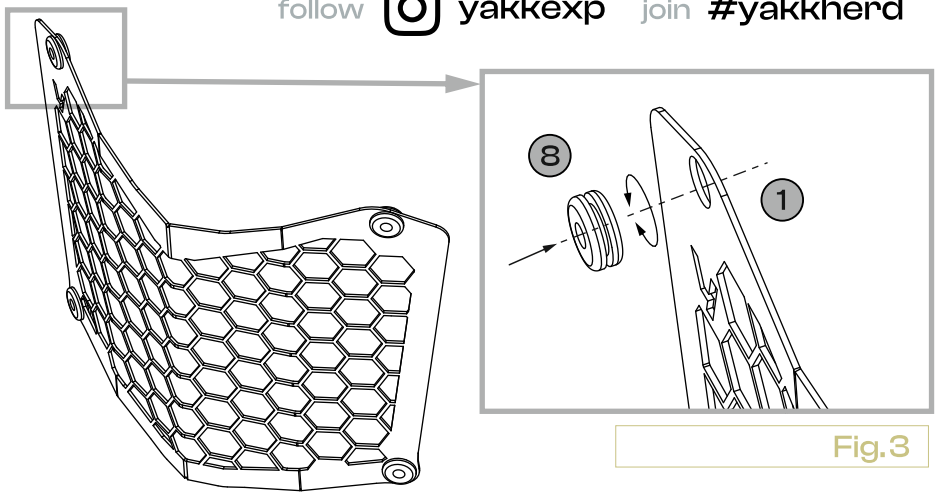

Fig.3

Mount the grommets **(8)** in the holes of the headlight guard **(1)**. **[Fig. 3]**

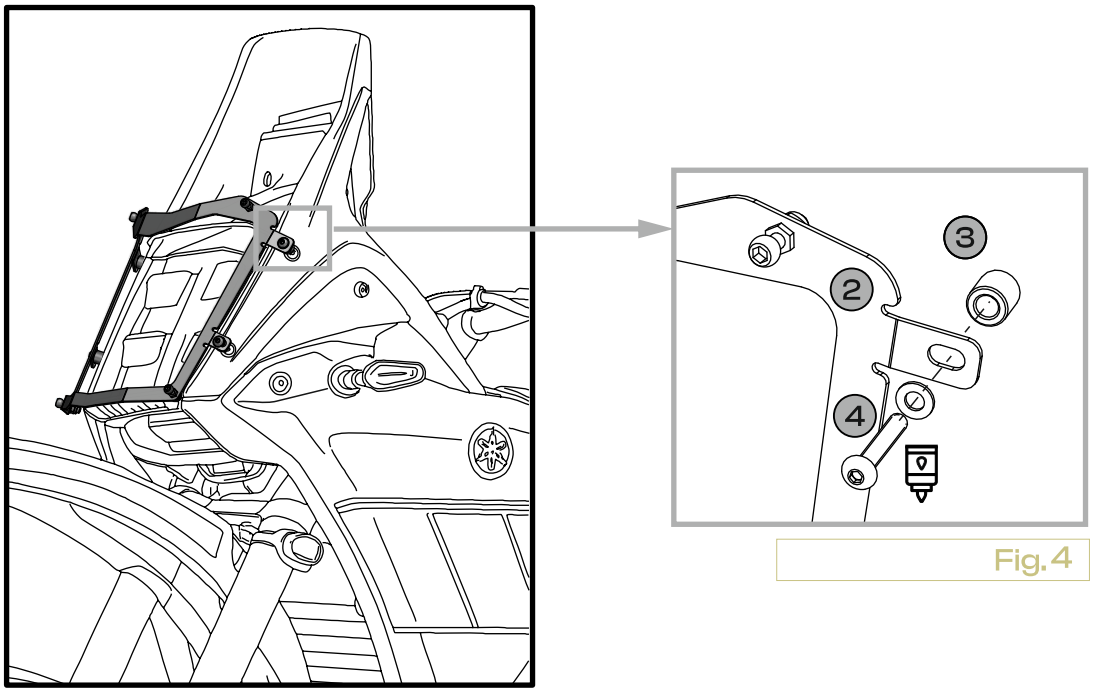

Fig.4

Attach the frame **(2)** with the bolt **(4)**, using the spacer **(3)**.

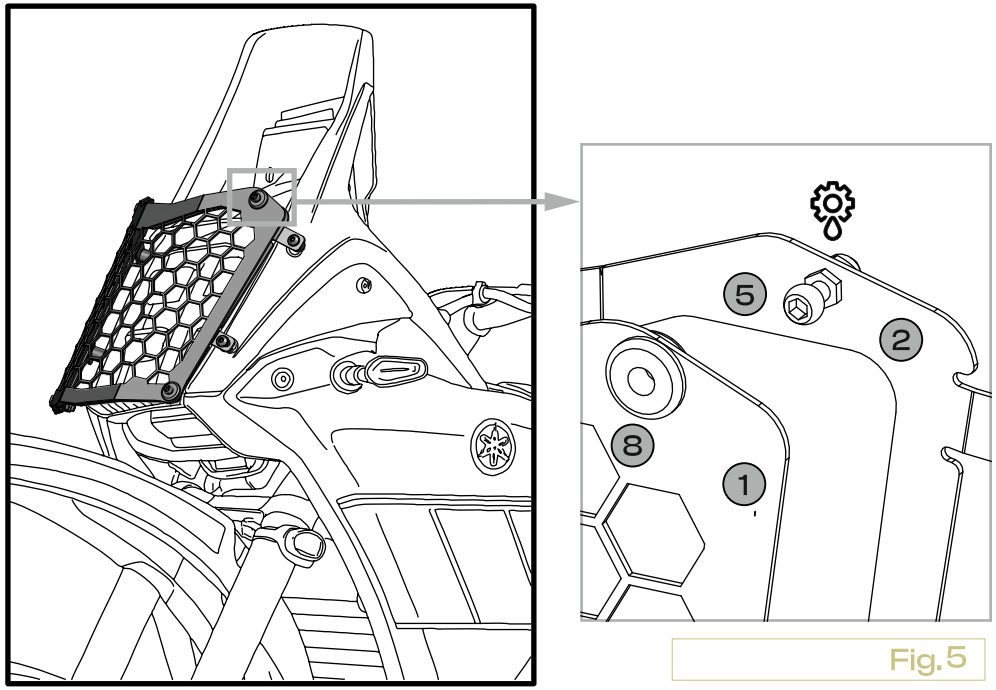

Fig.5

Mount the headlight guard **(1)** on to the frame **(2)** by pressing the grommets **(8)** onto the bolt **(5)**. For better fastening, apply grease to the bolt **(5)**. **[Fig.5]**