Read before installation.

All bolts have to be finaly tighten after installation all parts on vehicle.

BMW 900 GS

ID:3058458

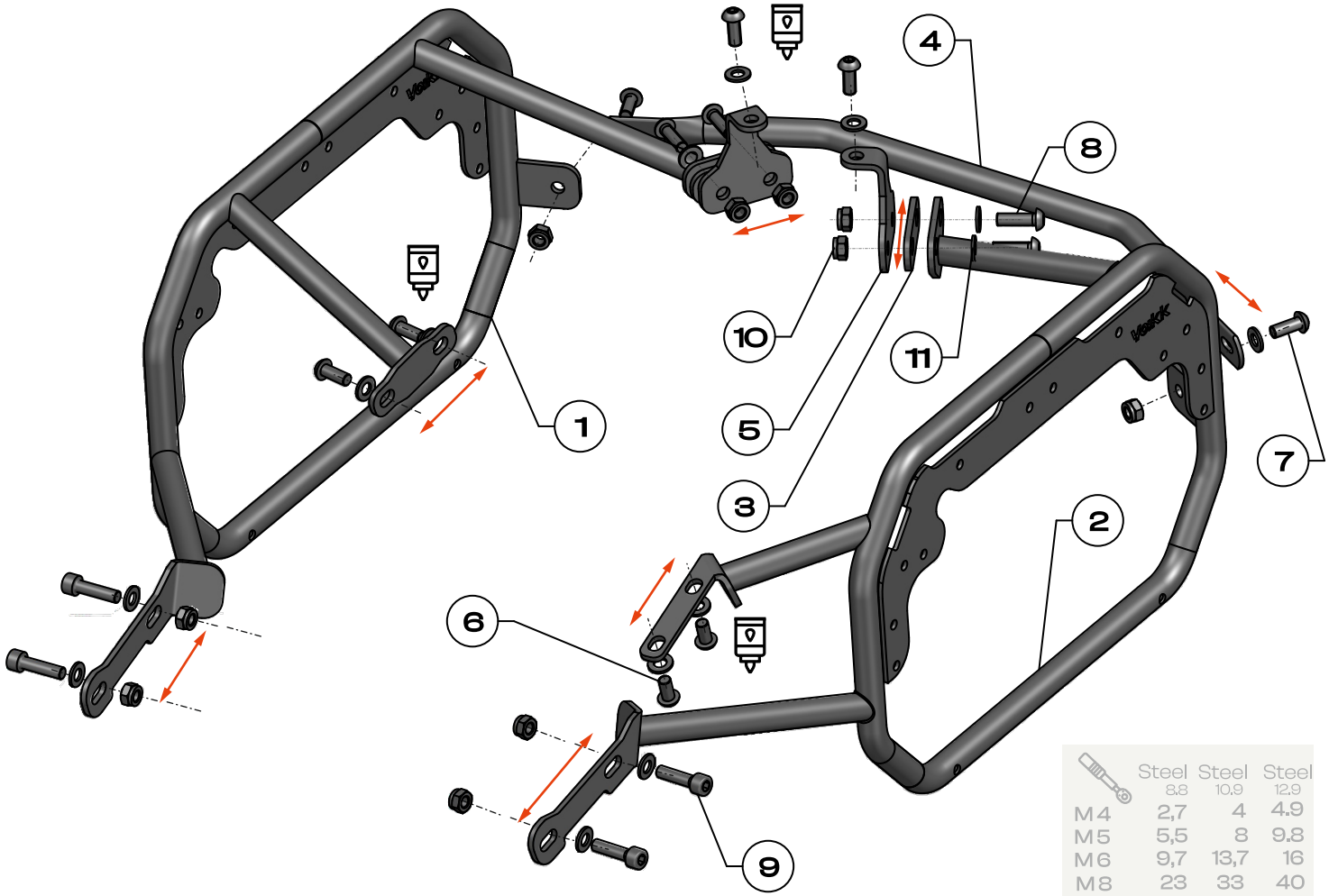

Fig. 1

	Steel 8.8	Steel 10.9	Steel 12.9
M4	2,7	4	4.9
M5	5,5	8	9.8
M6	9,7	13,7	16
M8	23	33	40
M10	47	66	83
M12	80	116	150
M14	130	184	240
M16	196	287	350
M18	270	395	490
M20	385	560	690

1 Side carrier - Right — 1×



2 Side carrier - Left — 1×

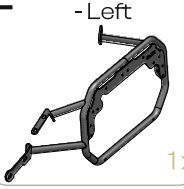

3 Plate — 2×

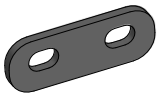

4 Center bracket — 1×



5 Bracket — 2×



6 Bolt — 2×
M8x16 -DIN 7380



7 Bolt — 6×
M8x20 -DIN 7380



8 Bolt — 4×
M8x25-DIN 7380



9 Bolt — 4×
M8x30 -DIN 912

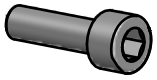

10 Nut — 10×
M8-DIN 985



11 Washer — 16×
M8-DIN 125



one person — use a medium-stregth — tighten with torque — OEM Original Equipment Manufacturer

!!! Initially, attach the screws loosely.
After assembling everything together, tighten them with the appropriate force.

follow yakkexp join #yakkherd

1. Remove the motorcycle seat , the rear plastic cover, and unscrew the hydraulic spring preload adjuster. **[Fig. 2]**

2. Fasten the bracket **[5]** using bolt **[7]** with washer **[11].** Use a medium threadloccker . Repeat this procedure on the opposite side. **[Fig. 2], [Fig. 3].**

Use a medium - threadloccker

5 Bracket	7 Bolt	11 Washer
		
2x	M8x20 -DIN 7380 2x	M8-DIN 125 2x



Fig. 2

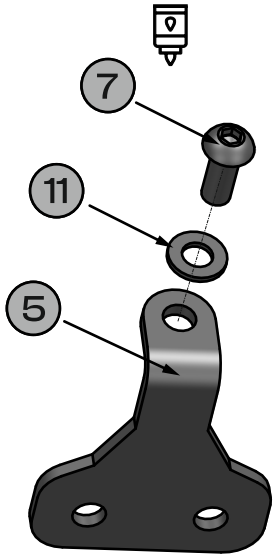

Fig. 3



Fig. 4

!!! Initially, attach the screws loosely.
After assembling everything together, tighten them with the appropriate force.

follow yakkexp join #yakkherd

3. Loosely fasten Left Side carrier **[2]** at the front mounting point using bolts **[9]**, washers **[11]** and nut **[10]** on both **[Fig. 1], [Fig. 5], [Fig. 6].**

4. Loosely fasten the Left Side Carrier **[2]** at the rear mounting point using bolt **[6]** and washer **[11]**, securing it to the hydraulic spring preload adjuster mounting point. **[Fig. 1], [Fig. 5], [Fig. 6].** Use a medium - threadloccker

5. Loosely fasten the Left Side Carrier **[2]** to bracket **[5]** using bolt **[8]**, washer **[11]**, and plate **[3]**, securing it from the rear with nut **[10]**.**[Fig. 1], [Fig. 7], [Fig. 8].**

8 Bolt	6 Bolt	9 Bolt	11 Washer	2 Side carrier - Left	3 Plate	10 Nut
		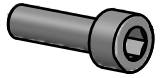			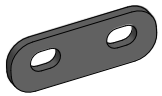	
M8x25-DIN 7380 2x	M8x16 -DIN 7380 2x	M8x30 -DIN 912 2x	M8-DIN 125 7x	1x	1x	M8-DIN 985 4x

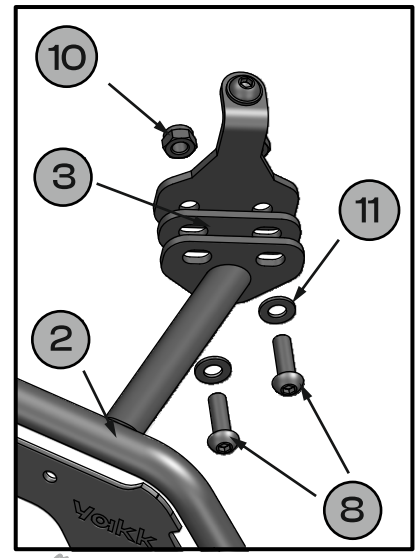

Fig. 8

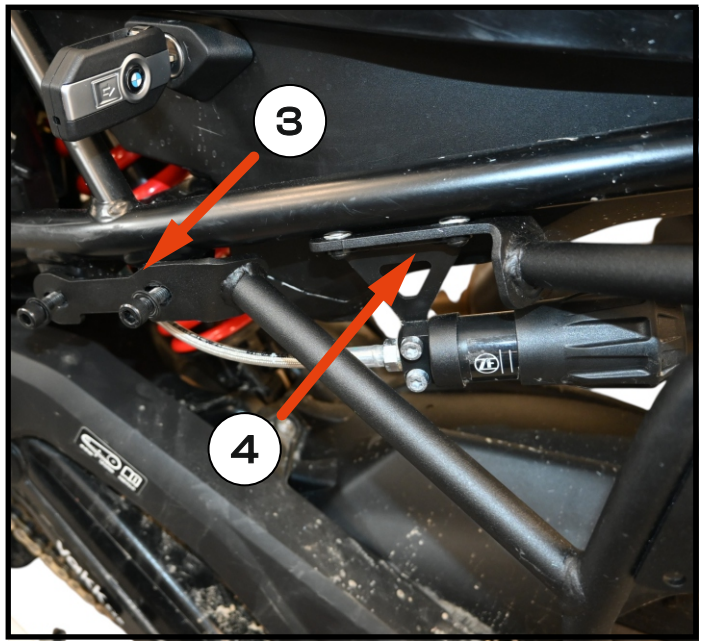

Fig. 5

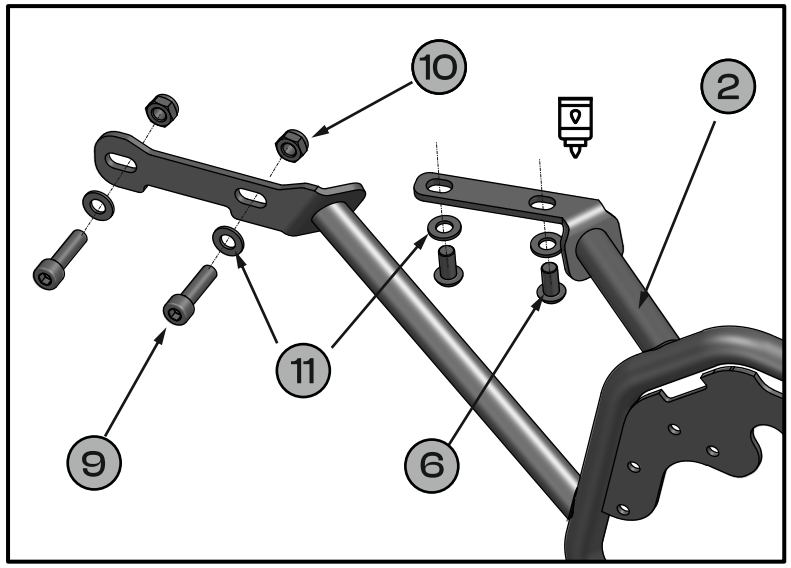

Fig. 6

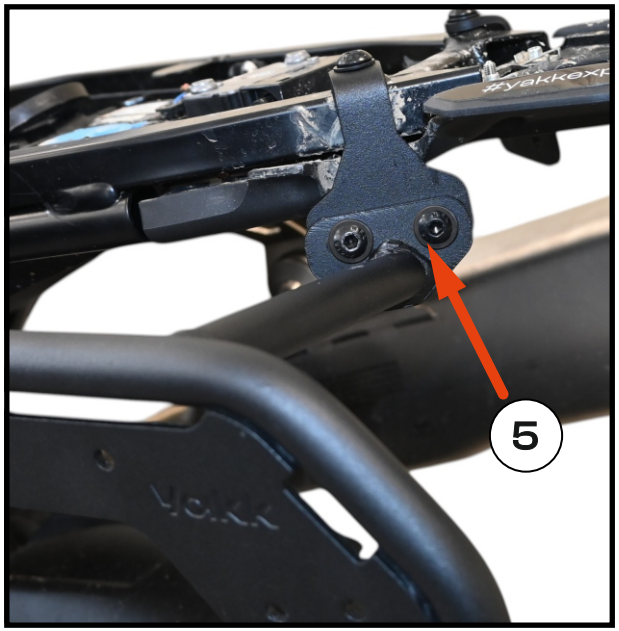

Fig. 7

!!! Initially, attach the screws loosely.
After assembling everything together, tighten them with the appropriate force.

follow yakkexp join #yakkherd

6. Unscrew the exhaust muffler mount and remove the original bolts.**[Fig. 9].**

7. Loosely fasten Right Side carrier **[1]** at the front mounting point using bolts **[9],** washers **[11]** and nut **[10]** on both **[Fig. 1], [Fig. 11], [Fig. 12].**

8. Loosely fasten the Right Side Carrier **[1]** using bolt **[5]** and washer **[11],** securing it at the exhaust muffler mounting point. . **[Fig. 1], [Fig. 10], [Fig. 12].** Use a medium - threadlocker

9. Loosely fasten the Right Side Carrier **[1]** to bracket **[5]** using bolt **[8],** washer **[11],** and plate **[3],** securing it from the rear with nut **[10].[Fig. 1], [Fig. 12], [Fig. 13].**

1 Side carrier - Right  1x	7 Bolt  M8x20 -DIN 7380 6x	8 Bolt  M8x25-DIN 7380 2x	9 Bolt 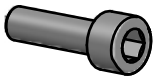 M8x30 -DIN 912 2x	11 Washer  M8-DIN 125 6x	3 Plate 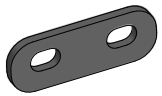 1x	10 Nut  M8-DIN 985 4x

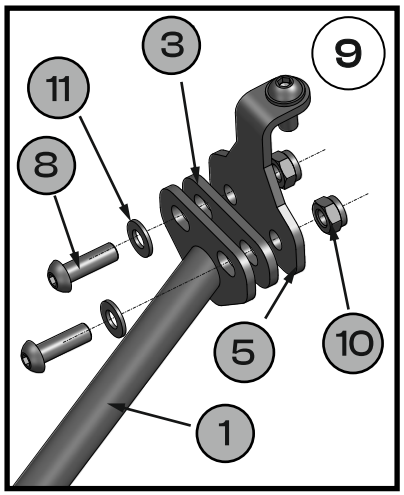

Fig. 13

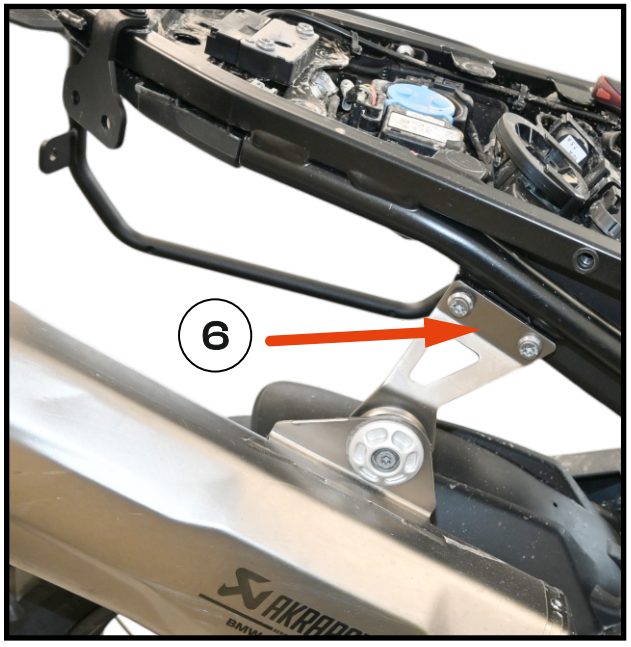

Fig. 9

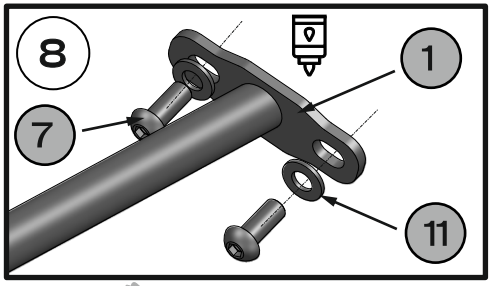

Fig. 10

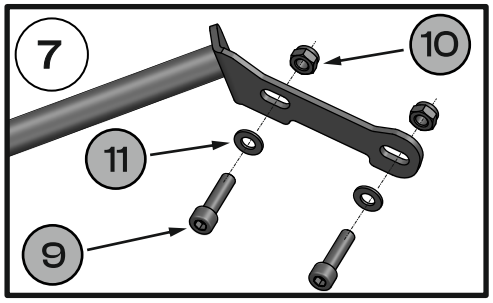

Fig.11

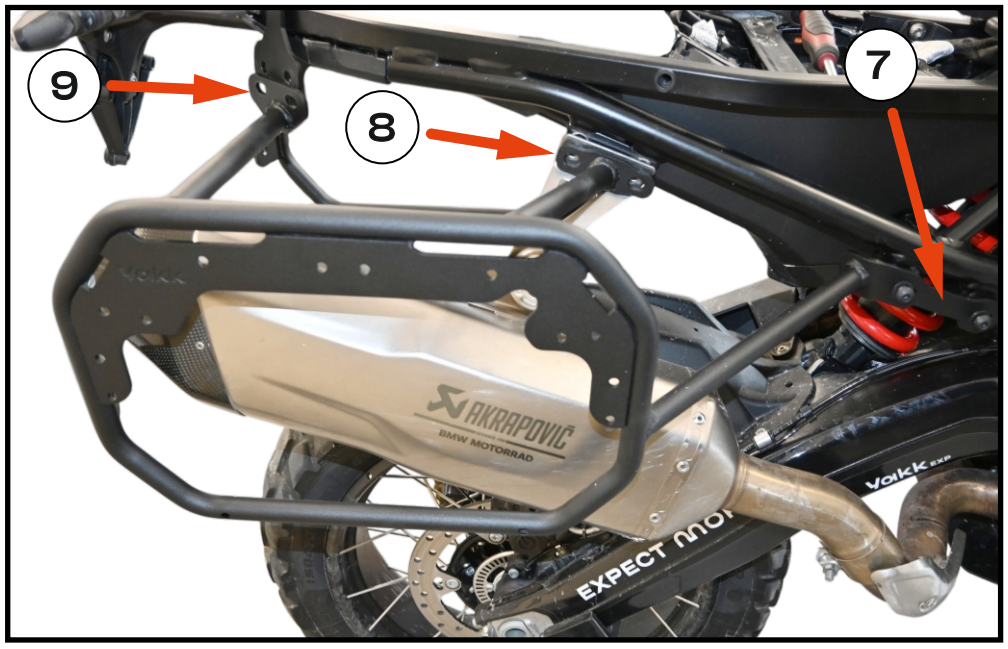

Fig. 12

!!! Initially, attach the screws loosely.
After assembling everything together, tighten them with the appropriate force.

10. Loosely fasten the left and right side carriers **[1], [2]** to the center bracket **[4]**using bolt **[7]**, nut **[10]**, and washer **[11]. [Fig. 1], [Fig. 6]**

11. Align the **Side Carriers** with the motorcycle centerline. **Tighten all bolts to the specified torque. [Fig.1], [Fig.15]**

12. Install the motorcycle seat. **[Fig.1], [Fig.15]**

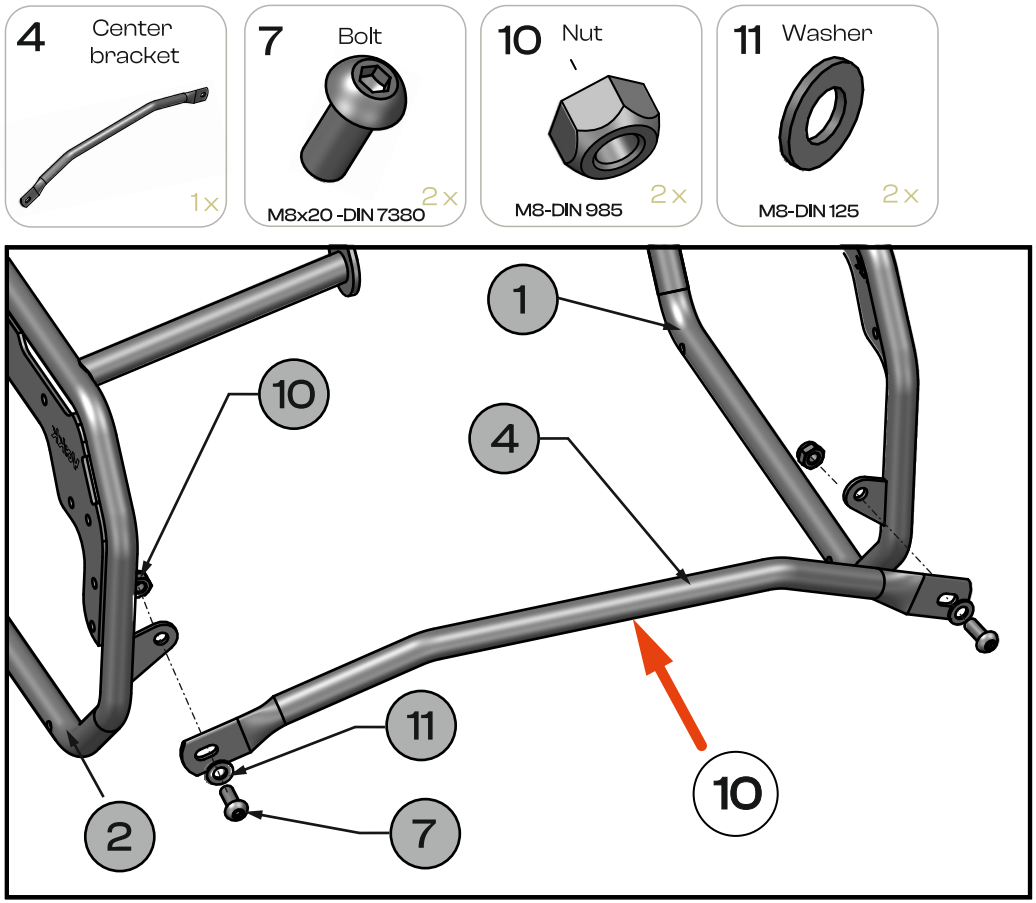

Fig. 14

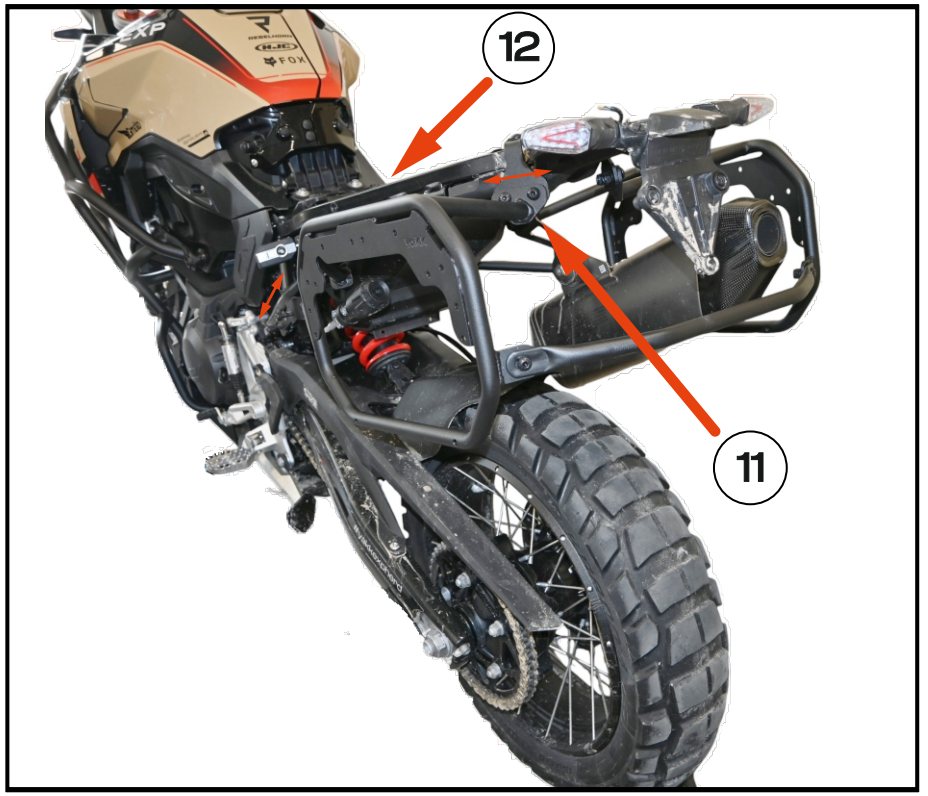

Fig. 15

Read before installation.

All bolts have to be finaly tighten after install

BMW 900 GS

ID:3058458/ID:3058457

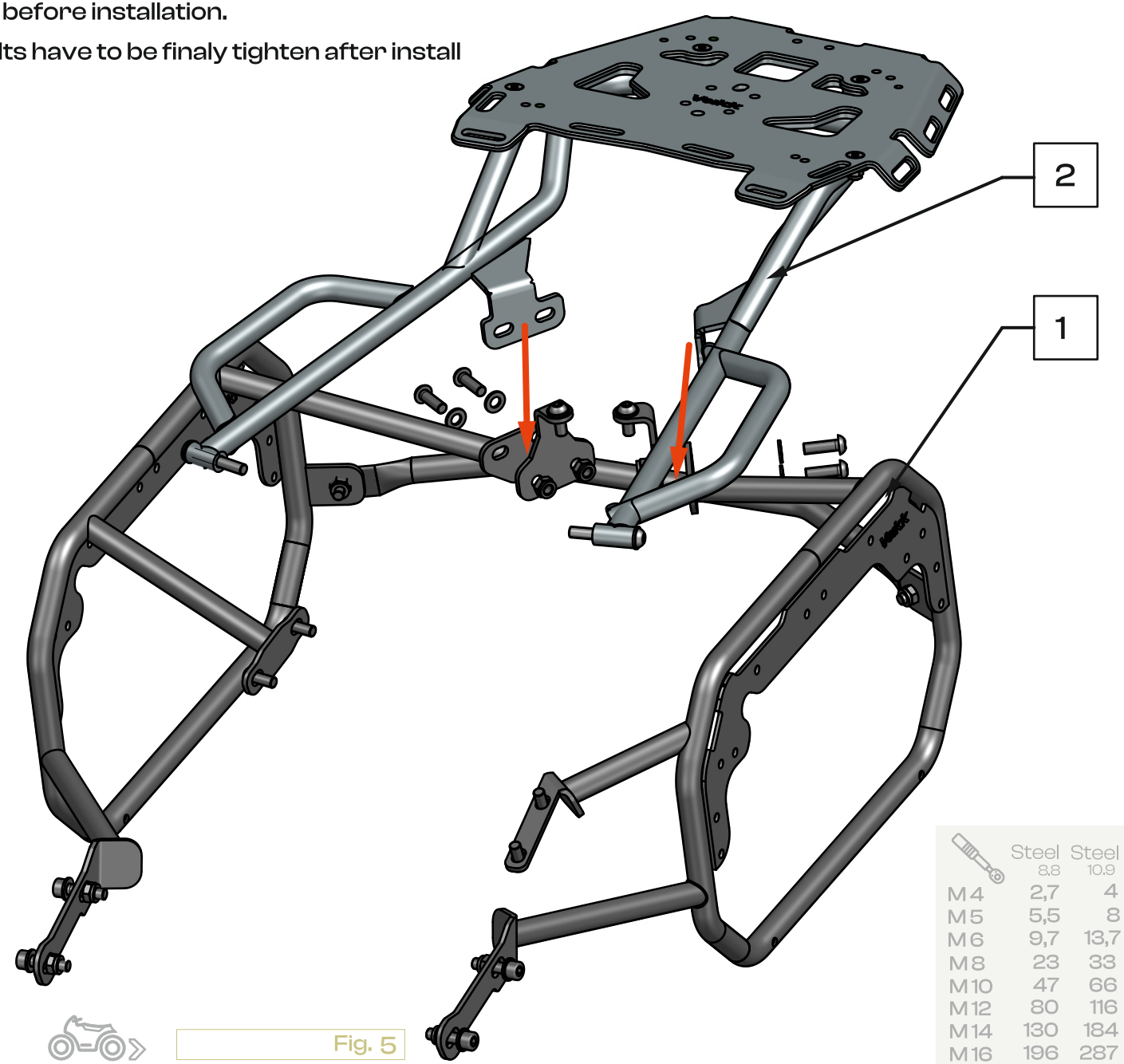

Fig. 5

	Steel 8.8	Steel 10.9	Steel 12.9
M4	2,7	4	4.9
M5	5,5	8	9.8
M6	9,7	13,7	16
M8	23	33	40
M10	47	66	83
M12	80	116	150
M14	130	184	240
M16	196	287	350
M18	270	395	490
M20	385	560	690

one person · use a medium-stregth · tighten with torque · OEM Original Equipment Manufacturer

1 Yaak exp ID: 3058458

Parts used from product

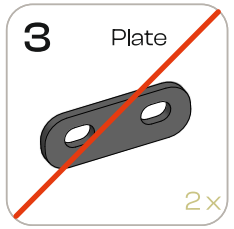

2 Yaak exp ID: 3058457

Parts used from product

