Read before installation.

Side pannier luggage rack

KTM 390 Adventure 25-

ID:3095046

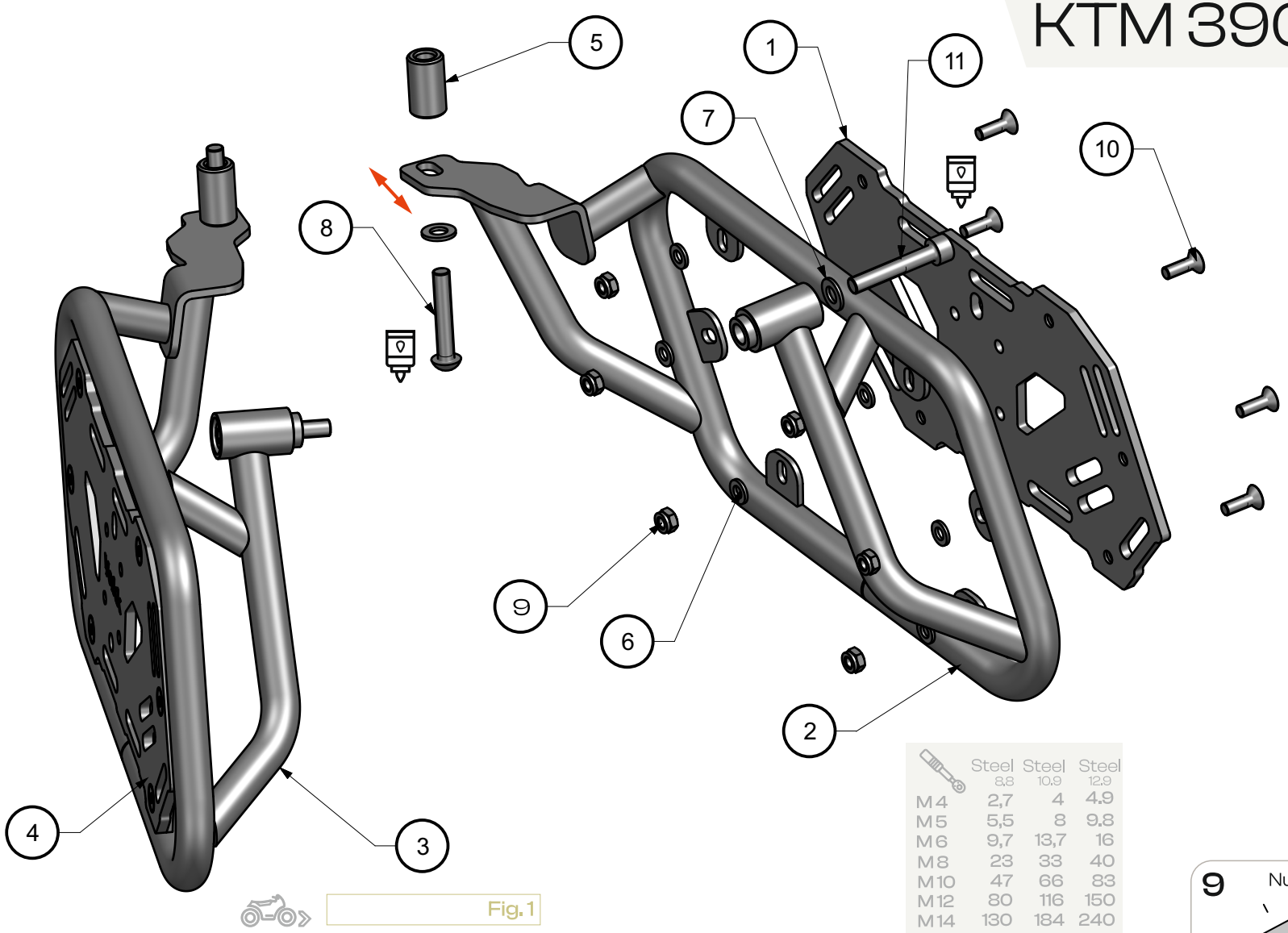

Fig. 1

	Steel 8.8	Steel 10.9	Steel 12.9
M4	2,7	4	4.9
M5	5,5	8	9,8
M6	9,7	13,7	16
M8	23	33	40
M10	47	66	83
M12	80	116	150
M14	130	184	240
M16	196	287	350
M18	270	395	490
M20	385	560	690

1 Left Luggage Plate — 1×

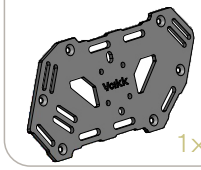

2 Left Rack Frame — 1×

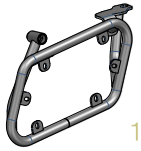

3 Right Rack Frame — 1×

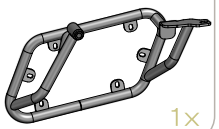

4 Right Luggage Plate — 1×



5 Spacer — D17xd9xH29 — 2×



6 Washer — M6-DIN 125 — 12×



7 Washer — M8-DIN 125 — 4×



8 Bolt — M8x45-DIN 7330 — 2×



9 Nut — M6-DIN 985 — 12×



10 Bolt — M6x18 -DIN 7991 — 12×



11 Bolt — M8x45 -DIN 912 — 2×

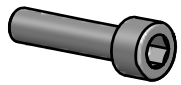

All bolts have to be finaly tighten after installation all parts on vehicle.

one person — use a medium-stregth — tighten with torque — OEM Original Equipment Manufacturer

Yakk EXP

assembly instructions

yakkexp.com

EXPLORE POSSIBILITIES

Read before installation.
All bolts have to be finaly tighten after install ation all parts on vehicle.

follow yakkexp join #yakkherd

1. Fasten the Left and Right Luggage Plates **[1], [4]** to the Left and Right Rack Frames **[2], [3]** using bolts **[10],** securing them from the rear with nuts **[9]** and washers **[6]. [Fig. 1] , [Fig. 2]**
Adjust the position of the Luggage Plates, then tighten all bolts to the specified torque.

2. Loosely fasten the Left and Right Rack Frames **[2], [3]** to the mounting points beneath the fender using spacers **[5],** bolts **[8],** and washers **[7].** Use a medium-strength adhesive. **[Fig. 1] , [Fig. 3], [Fig.4], [Fig.5],**

8 Bolt

M8x45-DIN 7330 2 x

1 Left Luggage Plate
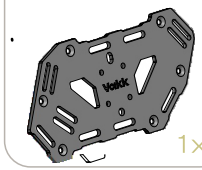
1 x

4 Right Luggage Plate
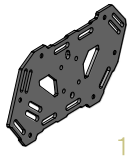
1 x

10 Bolt

M6x18 -DIN 7991 12 x

6 Washer

M6-DIN 125 12 x

9 Nut

M6-DIN 985 12 x

2 Left Rack Frame
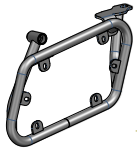
1 x

3 Right Rack Frame
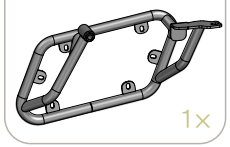
1 x

5 Spacer

D17xd9xH29 2 x

7 Washer

M8-DIN 125 2 x

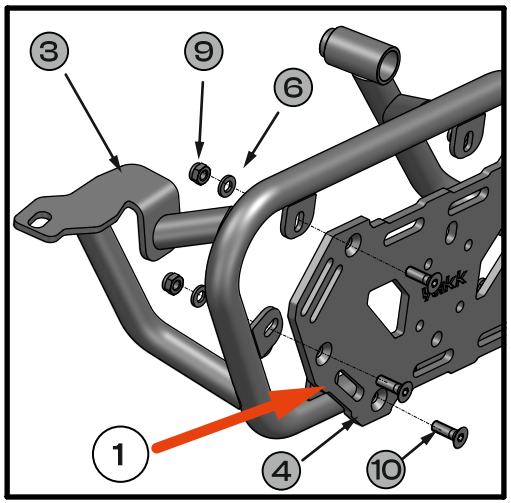

Fig. 2

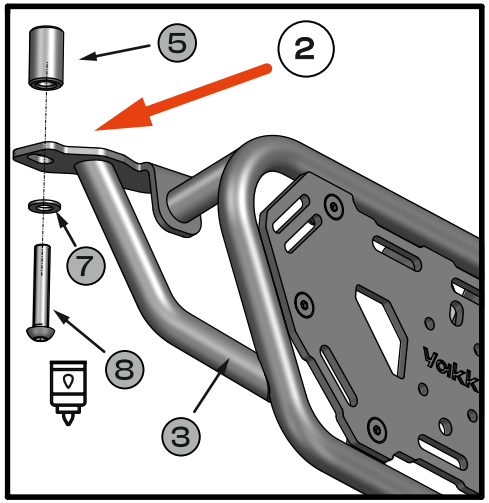

Fig. 3

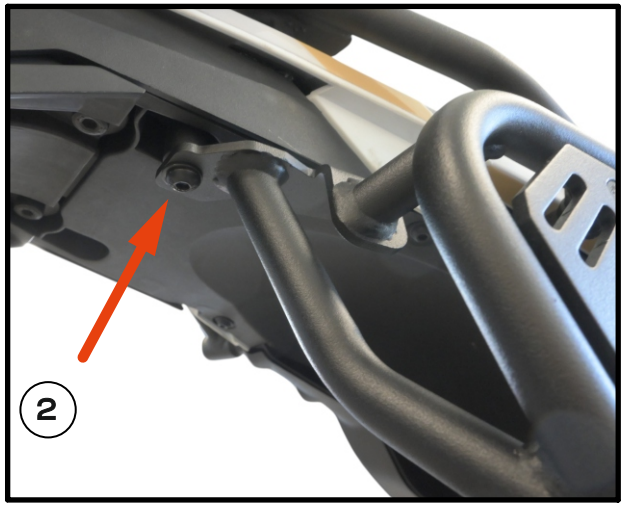

Fig. 4


Fig. 5

one person | use a medium-stregth | tighten with torque | OEM Original Equipment Manufacturer

Vakk EXP

assembly instructions

yakkexp.com

EXPLORE POSSIBILITIES

3. Loosely fasten the Left and Right Rack Frames **[2], [3]** to the mounting points using bolts **[11],** and washers **[7].** Use a medium-strength adhesive. **[Fig. 1] , [Fig. 6], [Fig.7], [Fig.8],**

4. Align the Side pannier luggage rack with the motorcycle's centerline and tighten all bolts to the specified torque. **[Fig.1], [Fig.6],**

11 Bolt

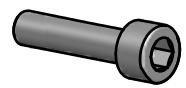

M8x45 -DIN 912 2×

7 Washer



M8-DIN 125 2×



Fig. 6

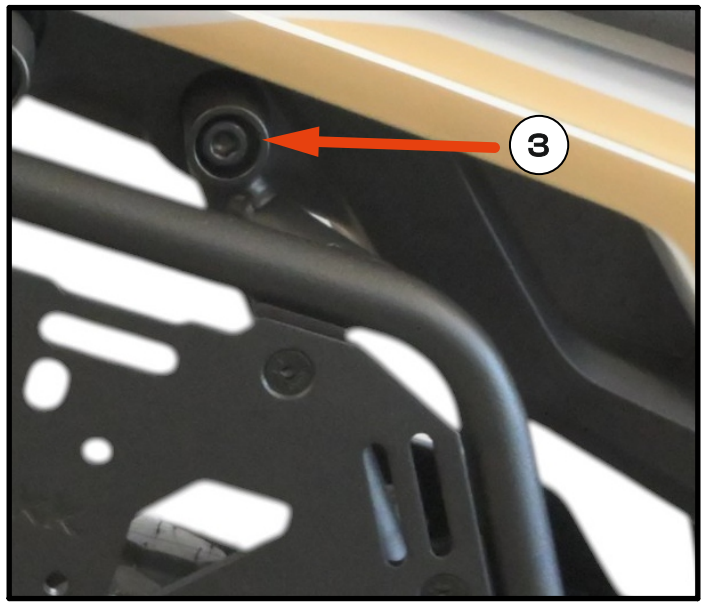

Fig. 7

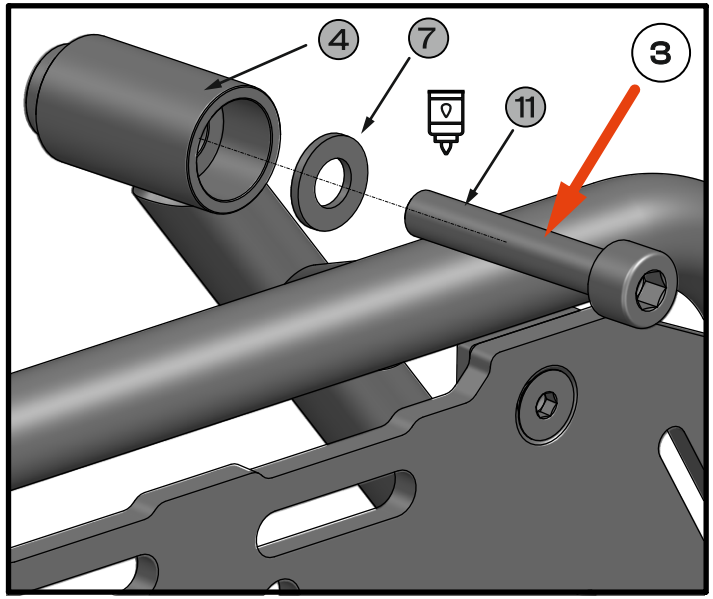

Fig. 8

one person | use a medium-stregth | tighten with torque | **OEM** Original Equipment Manufacturer