Read before installation.
All bolts have to be finaly tighten after installation all parts on vehicle.

Side and central pannier luggage rack

BMW R12

ID:3092213

	Steel 8.8	Steel 10.9	Steel 12.9
M4	2,7	4	4.9
M5	5,5	8	9.8
M6	9,7	13,7	16
M8	23	33	40
M10	47	66	83
M12	80	116	150
M14	130	184	240
M16	196	287	350
M18	270	395	490
M20	385	560	690

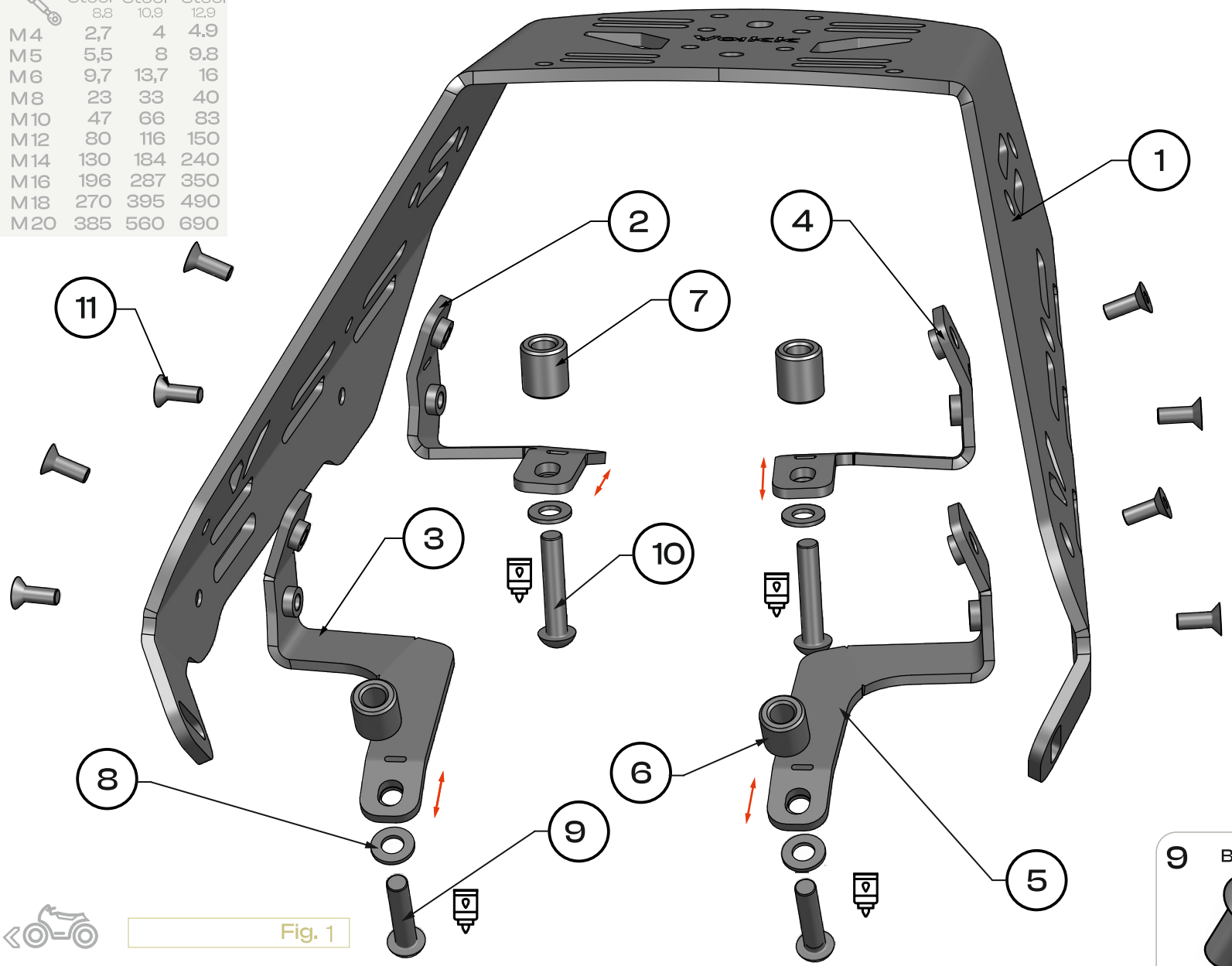

Fig. 1

1 Luggage — 1x



2 Rear right bracket — 1x



3 Front right bracket — 1x



4 Rear left bracket — 1x



5 Front left bracket — 1x



6 Spacer — D17xd9xH17 — 2x



7 Spacer — D17xd9xH19 — 2x



8 Washer — M8-DIN 125 — 4x



9 Bolt — 2x — M8x35-DIN 7380



10 Bolt — 2x — M8x40-DIN 7380



11 Bolt — 8x — M6x16-DIN 7991



one person — use a medium-stregth — tighten with torque — OEM Original Equipment Manufacturer

Vakk EXP

assembly instructions

yakkexp.com

EXPLORE POSSIBILITIES

!!! Initially, attach the screws loosely.
After assembling everything together, tighten them with the appropriate force.

1.Remove the seat

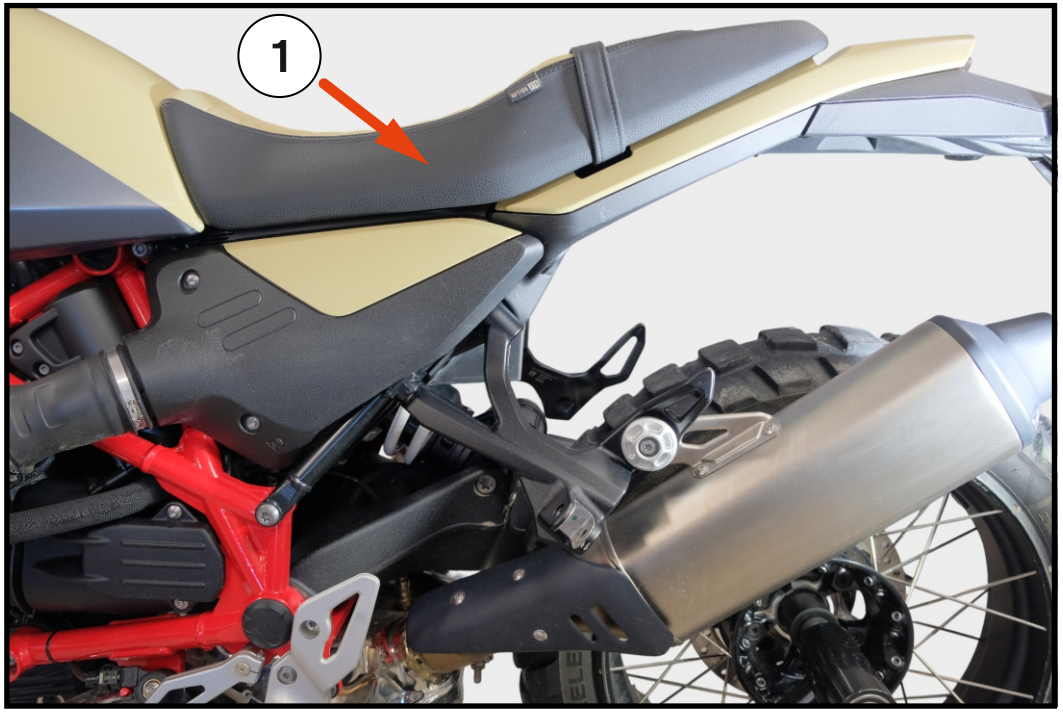

Fig. 2



Fig. 3

!!! Initially, attach the screws loosely.
After assembling everything together, tighten them with the appropriate force.

2. Install and fasten the rear right and left brackets **[2], [4]** using bolts **[10]** through washer **[8],** applying spacer sleeve **[7]** at the mounting points under the fender, as shown in **[Fig. 1], [Fig. 4],[Fig. 5].**

3. Install and fasten the front right and left brackets **[3], [5]** using bolts **[10]** through washer **[8],** applying spacer sleeve **[6]** at the mounting points under the fender, as shown in **[Fig. 1] , [Fig. 5],[Fig. 6].**

Use a medium-strength threadlocker adhesive.

2 Rear right bracket	3 Front right bracket	4 Rear left bracket	5 Front left bracket	6 Spacer	7 Spacer	8 Washer	9 Bolt	10 Bolt
		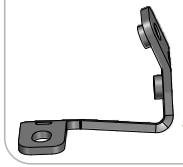						
1x	1x	1x	1x	D17xd9xH17 2x	D17xd9xH19 2x	M8-DIN 125 4x	M8x35-DIN 7380 2x	M8x40-DIN 7380 2x

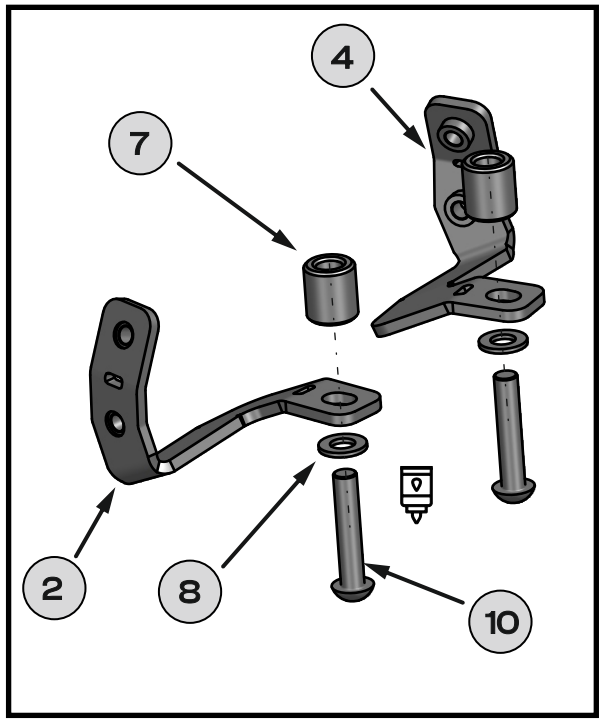

Fig. 4

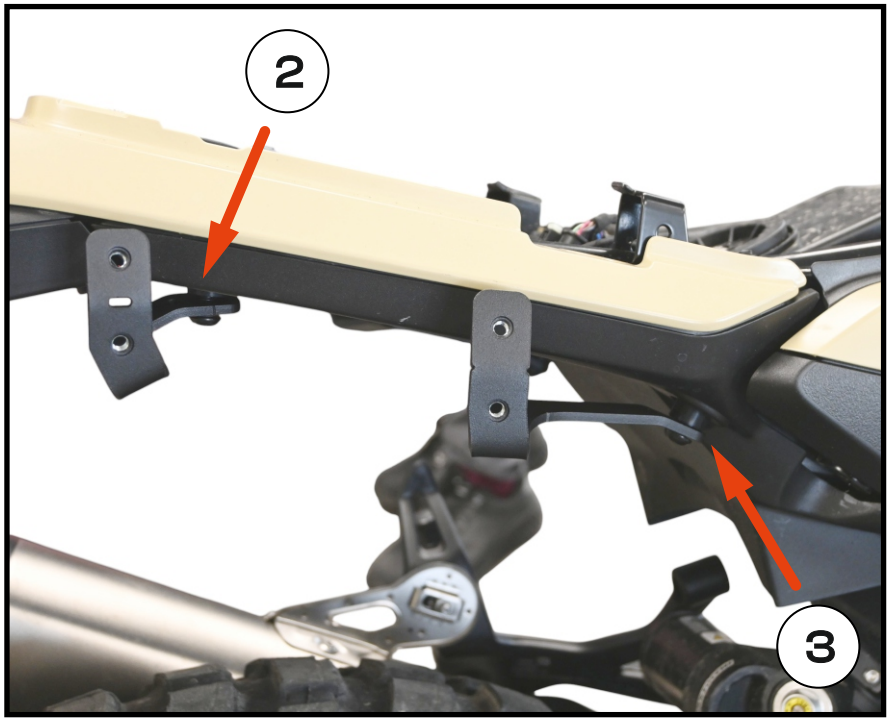

Fig. 5

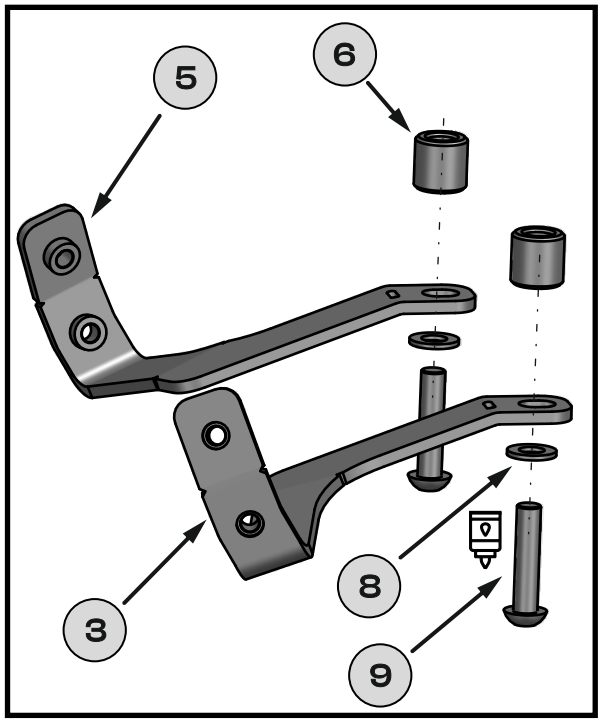

Fig. 6

!!! Initially, attach the screws loosely.
After assembling everything together, tighten them with the appropriate force.

5. Install and fasten the luggage rack **[1]** to the front and rear right and left brackets using bolts **[11],** as shown in **[Fig. 1], [Fig. 7].**

6. Install and fasten the seat.**[Fig. 1], [Fig. 7].**

7. Align the luggage rack with the motorcycle axis and tighten all bolts with the appropriate torque. [Fig. 1] , [Fig. 8].

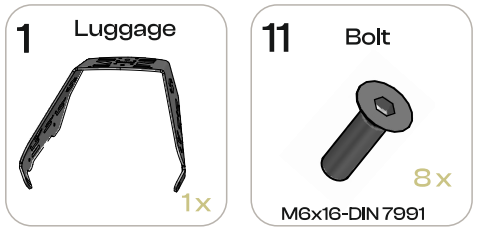

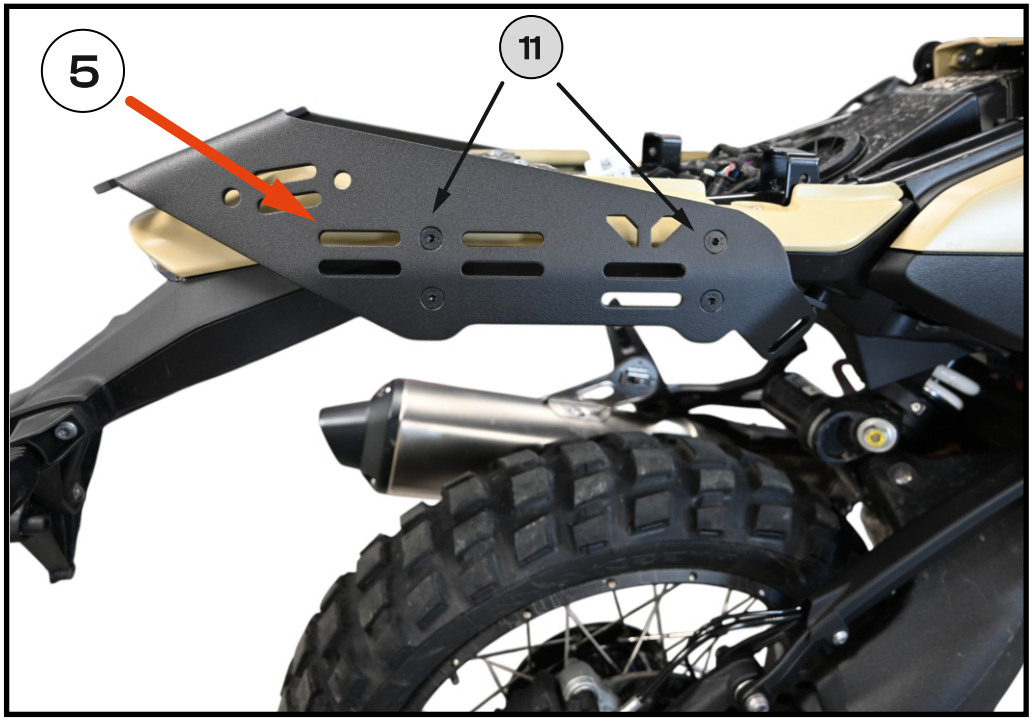

Fig. 7



Fig. 8