Read before installation.
All bolts have to be finaly tighten after installation all parts on vehicle.

Side Carriers

Kove 800X

ID:3059968

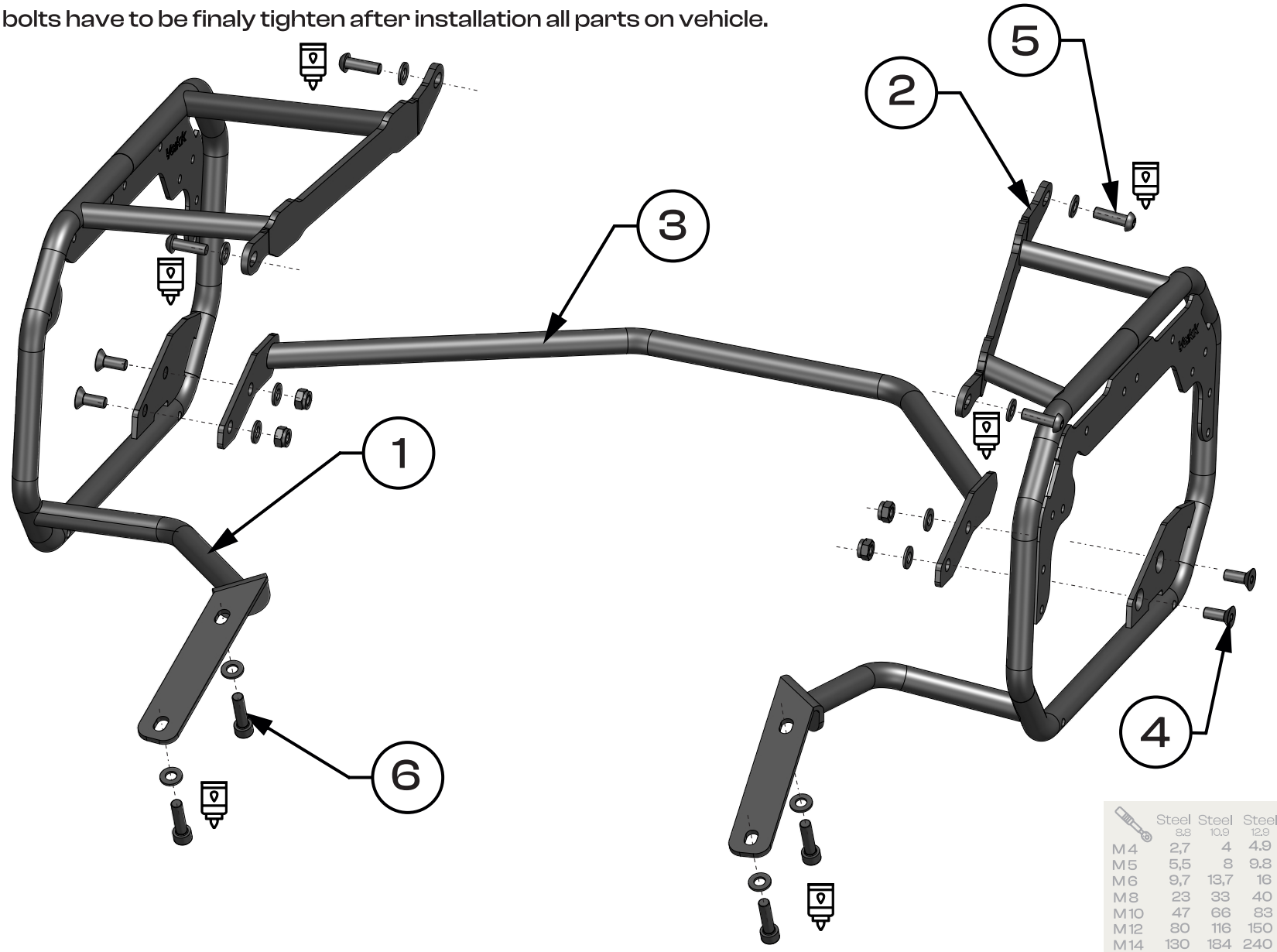

	Steel 8.8	Steel 10.9	Steel 12.9
M4	2,7	4	4.9
M5	5,5	8	9.8
M6	9,7	13,7	16
M8	23	33	40
M10	47	66	83
M12	80	116	150
M14	130	184	240
M16	196	287	350
M18	270	395	490
M20	385	560	690

1 Side carrier - Right — 1x



2 Side carrier - Left — 1x



3 Center bracket — 1x



4 Bolt — 4x



M8x20 -DIN 7991

5 Bolt — 4x



M8x25 -DIN 7380

6 Bolt — 4 x

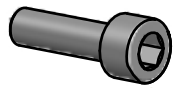

M8x30-DIN 912

7 Nut — 4x



M8-DIN 985

8 Washer — 12x



M8-DIN 125

Fig. 1

one person | use a medium-stregth | tighten with torque | OEM Original Equipment Manufacturer

!!! Initially, attach the screws loosely.
After assembling everything together, tighten them with the appropriate force.

follow yakkexp join #yakkherd

1. Unscrew bolts securing the and unscrew the passenger footrest brackets. **[Fig. 2]**
2. Install the right-side carrier **[1]** in the correct position and secure it using bolts **[6]** and washer **[8]**, then **loosely** tighten the passenger footrests. Use medium-strength adhesive. **[Fig. 3]**
3. Fasten the right-side carrier **[1]** at the specified locations using a bolts **[5]** with a washers **[8]**. Use medium-strength adhesive. **[Fig. 4]**

1 Side carrier - Right	5 Bolt	6 Bolt	8 Washer
		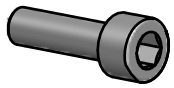	
1x	2x M8x25 -DIN 7380	2 x M8x30-DIN 912	4x M8-DIN 125

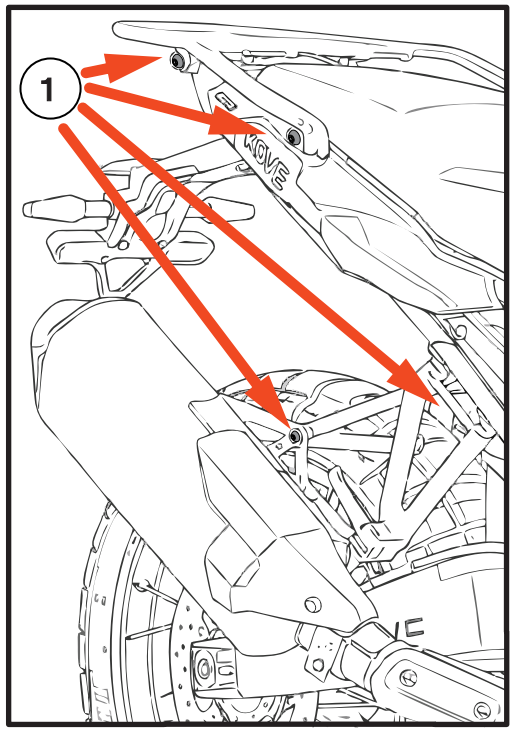

Fig. 2

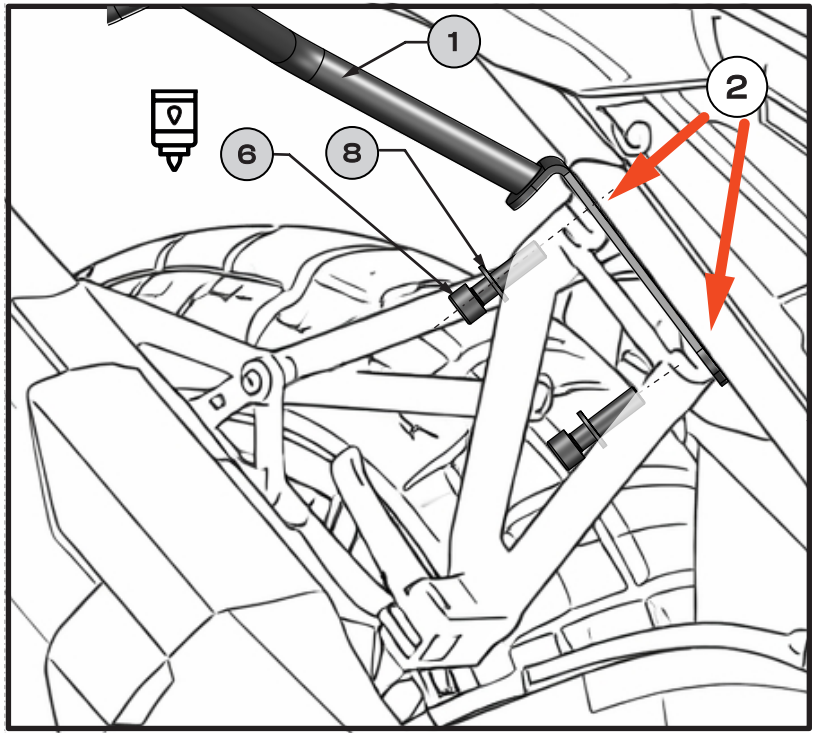

Fig. 3

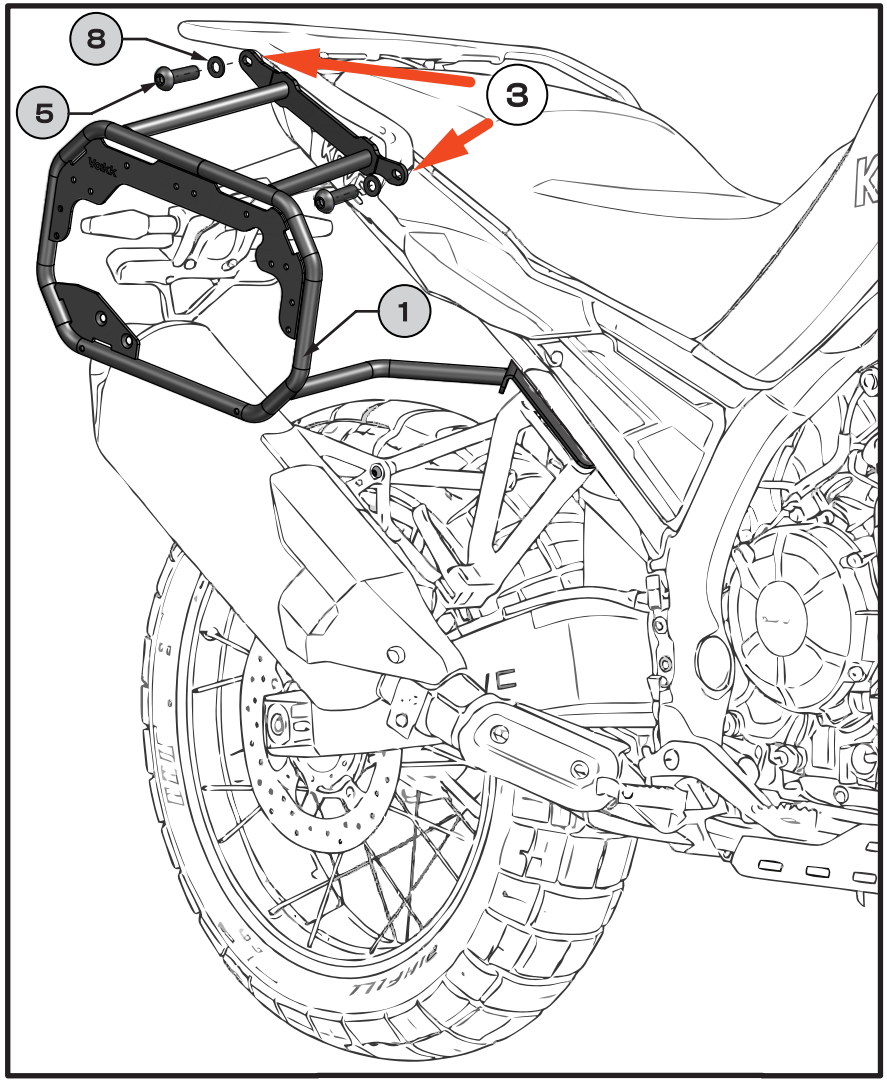

Fig. 4

!!! Initially, attach the screws loosely.
After assembling everything together, tighten them with the appropriate force.

4. Unscrew bolts securing the and unscrew the passenger footrest brackets. **[Fig. 5]**

5. Install the left-side carrier **[2]** in the correct position and secure it using bolts **[6]** and washer **[8]**, then **loosely** tighten the passenger footrests. Use medium-strength adhesive. **[Fig. 3]**

6. Fasten the left-side carrier **[2]** at the specified locations using a bolts **[5]** with a washers **[8]**. Use medium-strength adhesive. **[Fig. 4]**

2 Side carrier - Left  1x	5 Bolt  M8x25 -DIN 7380 2x	6 Bolt 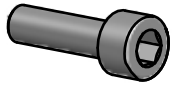 M8x30-DIN 912 2 x	8 Washer  M8-DIN 125 4x

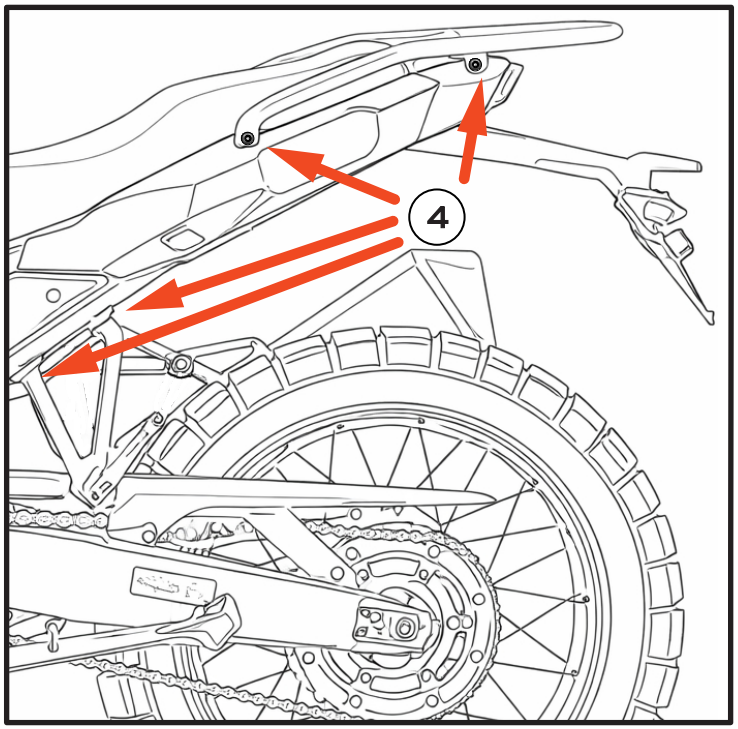

Fig.5

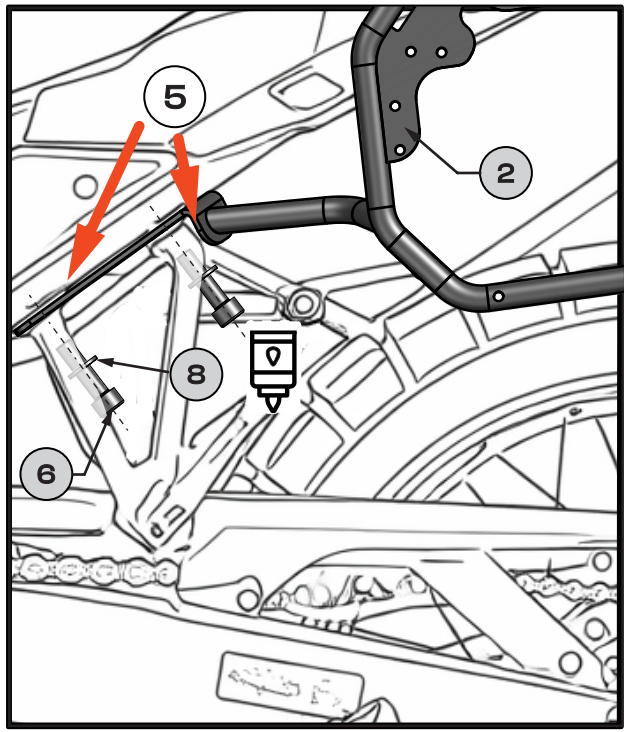

Fig.6

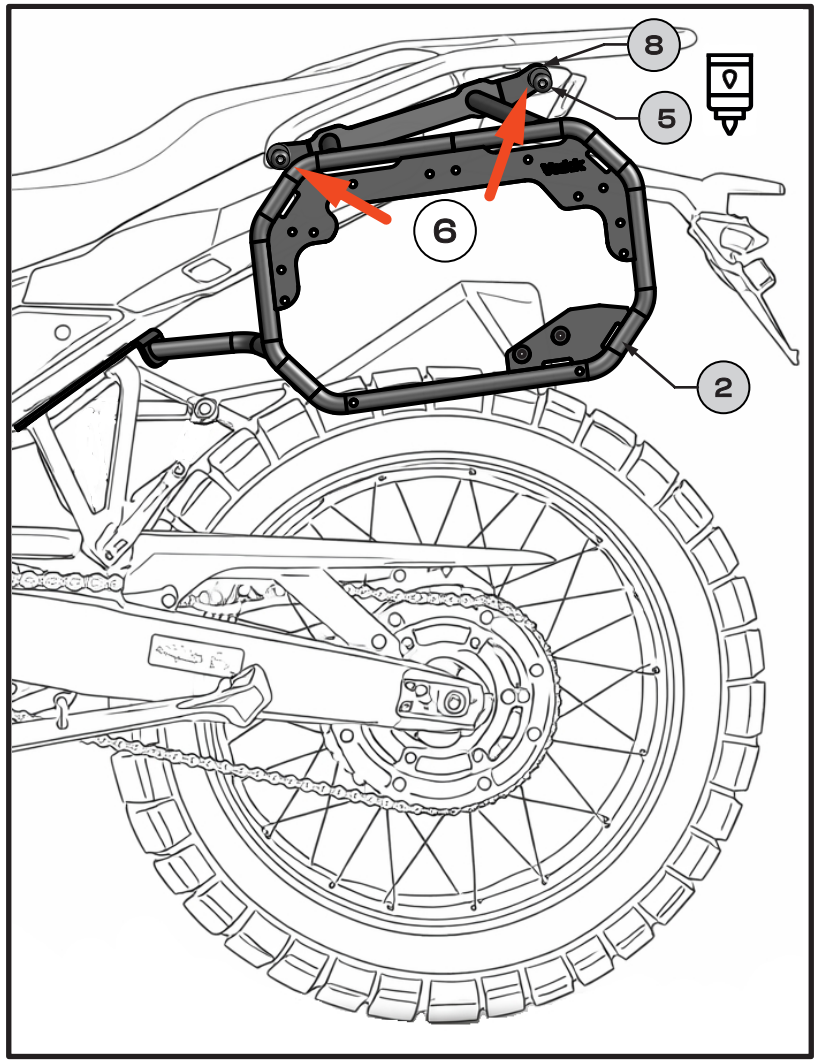

Fig.7

!!! Initially, attach the screws loosely.
After assembling everything together, tighten them with the appropriate force.

7.Mount and fasten the center bracket **[3]** to right and left Side carrier **[1]** , **[2]** using bolts **[4]**, securing them with nut **[7]** and washer **[8]**. **[Fig. 8]** Repeat on the opposite side of the motorcycle.

8. Adjust the side carriers along the motorcycle's axis and tighten all bolts with the appropriate fastening torque. **[Fig. 9]**

3 Center bracket	4 Bolt	7 Nut	8 Washer
	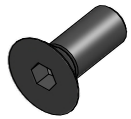		
1×	M8x20 -DIN 7991 4×	M8-DIN 985 4×	M8-DIN 125 4×

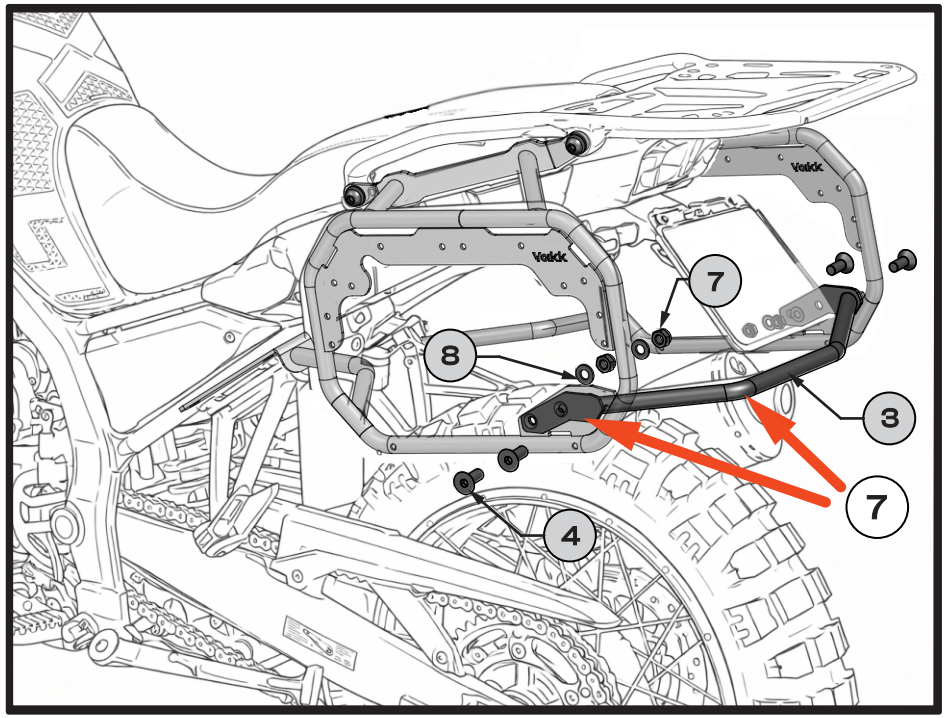

Fig.8

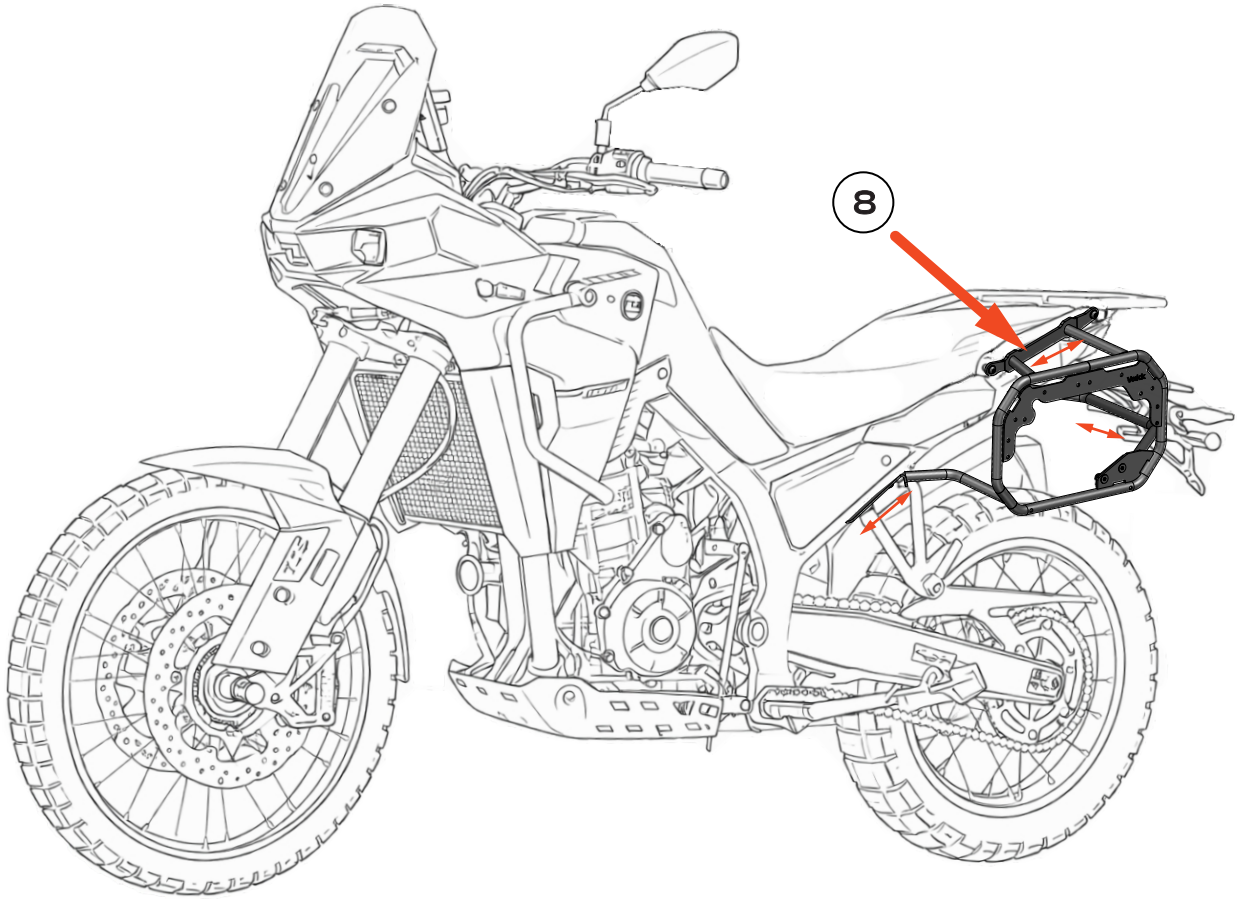

Fig.9