Read before installation.
All bolts have to be finaly tighten after installation all parts on vehicle.

Rear top case rack

Kove 800X Rally

ID:3077851

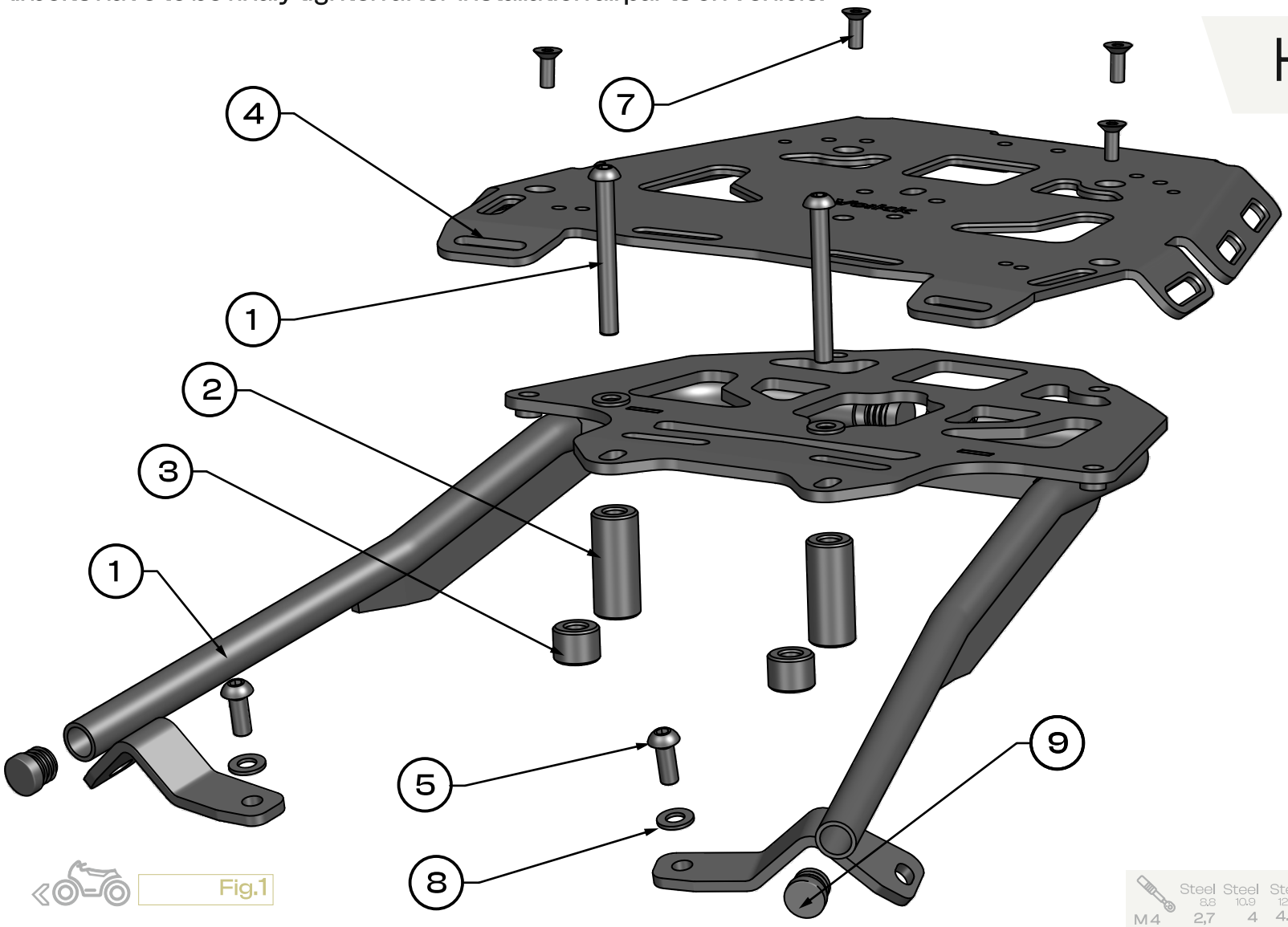

Fig.1

1 Support frame — 1×

2 Spacer — D20 x d9x H46 — 2×

3 Spacer — D20 x d9x H15 — 2×

4 Top case plate — 1×

5 Bolt — M8x20 -DIN 7380 — 2×

6 Bolt — M8x70-DIN 7380 — 2×

7 Bolt — M6x16 -DIN 7991 — 4×

8 Washer — M8-DIN 125 — 4×

9 End cup — 4×

	Steel 8.8	Steel 10.9	Steel 12.9
M4	2,7	4	4.9
M5	5,5	8	9.8
M6	9,7	13,7	16
M8	23	33	40
M10	47	66	83
M12	80	116	150
M14	130	184	240
M16	196	287	350
M18	270	395	490
M20	385	560	690

one person · use a medium-stregth · tighten with torque · OEM · Original Equipment Manufacturer

Yakk EXP

assembly instructions

yakkexp.com

EXPLORE POSSIBILITIES

!!! Initially, attach the screws loosely.
After assembling everything together, tighten them with the appropriate force.

follow yakkexp join #yakkherd

1. Remove the seat. **[Fig. 2]**
2. Install and fasten the suport frame **[1]** to the motorcycle at the indicated mounting point using bolts **[6]** with washers **[8],** applying spacer **[2] [Fig. 4] Apply medium-strength threadlocker.**
3. Install and fasten the suport frame **[1]** to the motorcycle at the indicated mounting point using bolts **[5]** with washers **[8] . [Fig. 4] Apply medium-strength threadlocker.**
4. Install and fasten the Top case plate **[4]** to the suport frame **[1]** using bolts **[7]** with **[Fig. 5]**
5. Install the end cup **[9] ,** at mount the seat **[Fig. 5]**

1 Support frame  1x	2 Spacer  D20 x d9x H46 2x	5 Bolt  M8x20 -DIN 7380 2x	6 Bolt 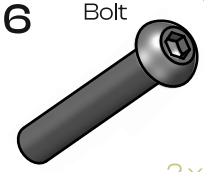 M8x70-DIN 7380 2x	8 Washer  M8-DIN 125 4x	4 Top case plate  1x	7 Bolt  M6x16 -DIN 7991 4x	9 End cup 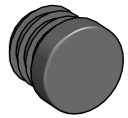 4x

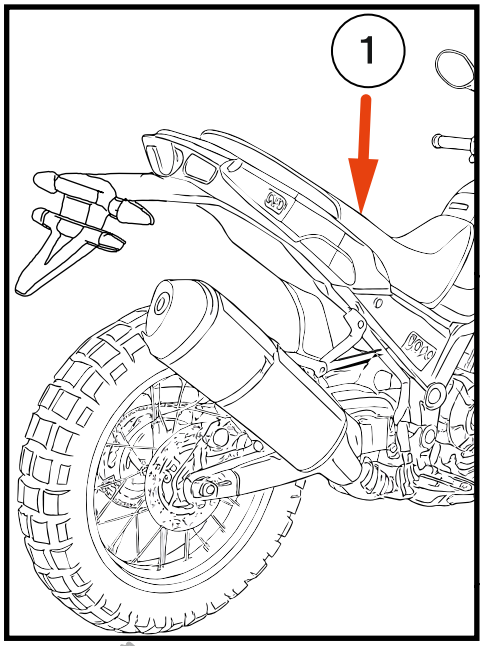

Fig.2

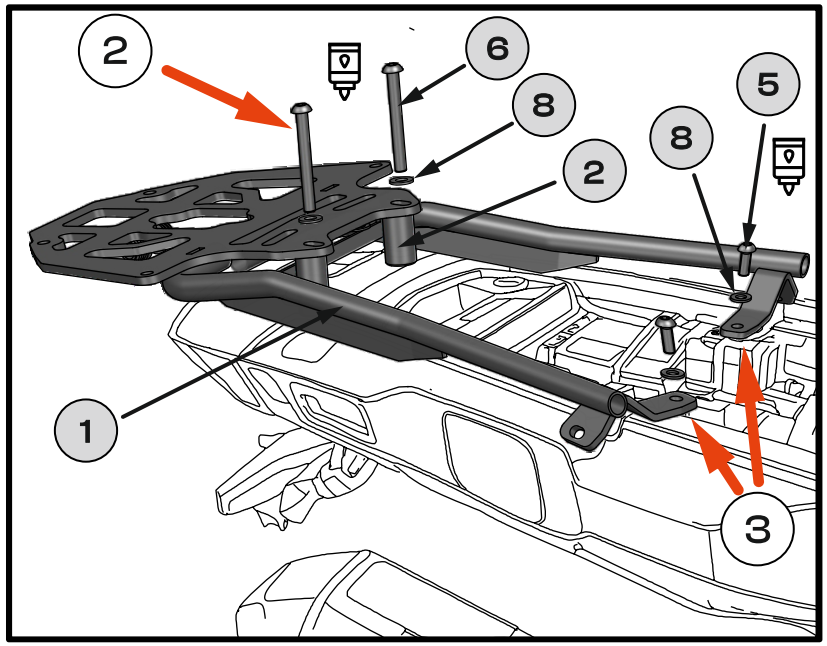

Fig. 4

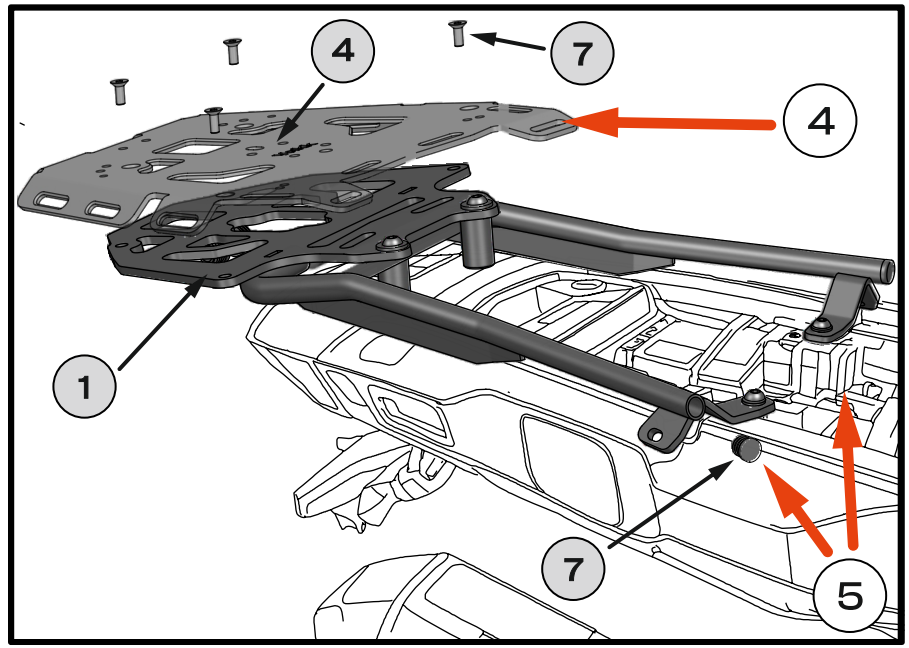

Fig. 4

Read before installation.

All bolts have to be finaly tighten after installation all parts on vehicle.

Rear top case rack / Side Carriers

Kove 800X Rally

ID:3077851 / ID:3077852

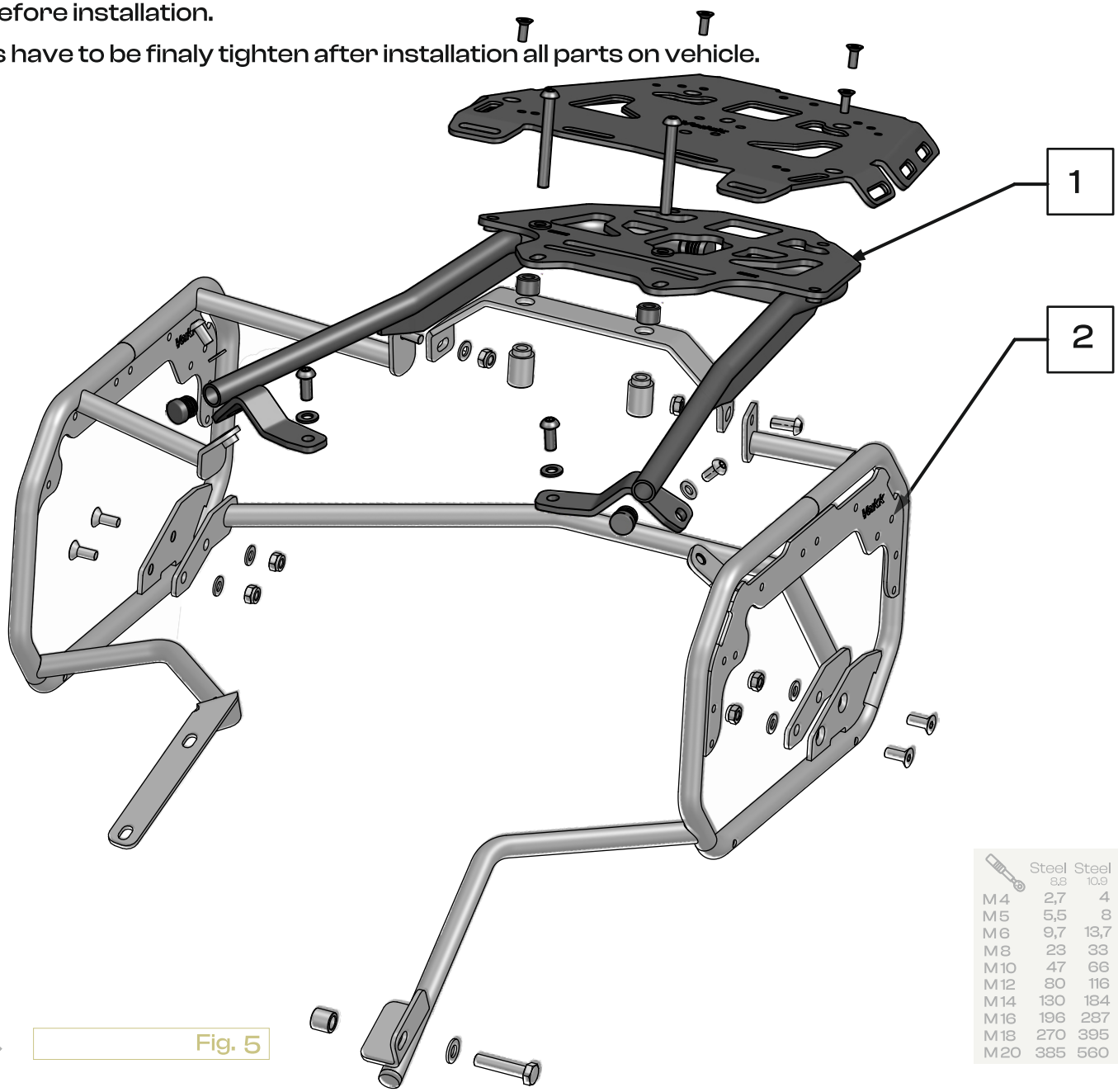

Fig. 5

	Steel 8.8	Steel 10.9	Steel 12.9
M4	2,7	4	4.9
M5	5,5	8	9.8
M6	9,7	13,7	16
M8	23	33	40
M10	47	66	83
M12	80	116	150
M14	130	184	240
M16	196	287	350
M18	270	395	490
M20	385	560	690

1 Yaak exp ID: 3077851

Parts used from product

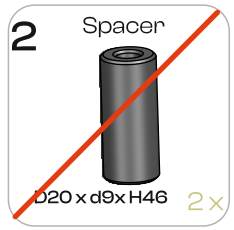

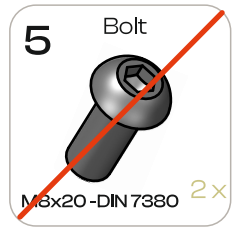

2 Yaak exp ID: 3077852

Parts used from product

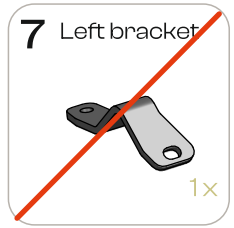







one person | use a medium-stregth | tighten with torque | OEM Original Equipment Manufacturer

Yakk EXP

assembly instructions

yakkexp.com

EXPLORE POSSIBILITIES