Read before installation.
All bolts have to be finaly tighten after installation all parts on vehicle.

Kove 800X Rally

ID:3077852

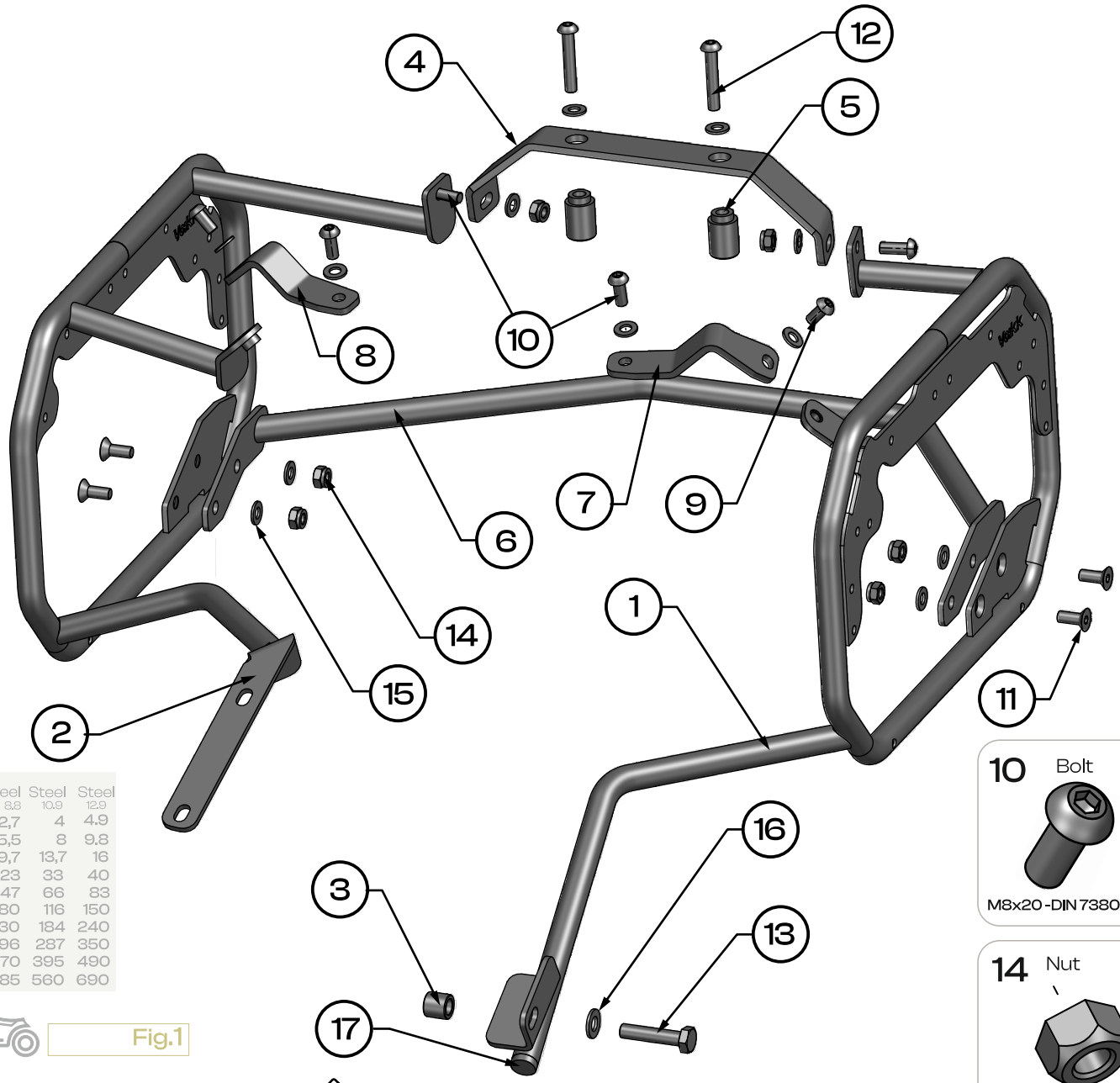

	Steel 8.8	Steel 10.9	Steel 12.9
M4	2,7	4	4.9
M5	5,5	8	9.8
M6	9,7	13,7	16
M8	23	33	40
M10	47	66	83
M12	80	116	150
M14	130	184	240
M16	196	287	350
M18	270	395	490
M20	385	560	690

Fig.1

one person | use a medium-stregth | tighten with torque | OEM Original Equipment Manufacturer

1 Side carrier - Left — 1×

2 Side carrier - Right — 1×

3 Spacer — D17 x d11x H16 — 1×

4 Rear support bracket — 1×

5 Spacer — D20 x d9x H31 — 2×

6 Center bracket — 1×

7 Left bracket — 1×

8 Right bracket — 1×

9 Bolt — M8x16-DIN 7380 — 2×

10 Bolt — M8x20 -DIN 7380 — 4×

11 Bolt — M8x20 -DIN 7991 — 4×

12 Bolt — M8x45 -DIN 7380 — 2×

13 Bolt — M10x1.25x45 -DIN 961 — 2×

14 Nut — M8-DIN 985 — 6×

15 Washer — M8-DIN 125 — 12×

16 Washer — M10-DIN 125 — 1×

17 End cup — 1×

Yakk EXP

assembly instructions

yakkexp.com

EXPLORE POSSIBILITIES

!!! Initially, attach the screws loosely.
After assembling everything together, tighten them with the appropriate force.

follow yakkexp join #yakkherd

1. Remove the seat. **[Fig. 2]** **2.** Unscrew and remove the exhaust bracket . **[Fig. 3]**

3. Install and fasten the rear support bracket **[4]** to the motorcycle at the indicated mounting point using bolts **[12]** with washers **[15],** applying spacer **[5] [Fig. 4]** **Apply medium-strength threadlocker.**

4. Install and fasten the left and right brackets **[7], [8]** to the motorcycle at the indicated mounting points using bolts **[10]** with washers **[15]. [Fig. 4]** **Apply medium-strength threadlocker.**

4 Rear support bracket	5 Spacer	7 Left bracket	8 Right bracket	10 Bolt	12 Bolt	15 Washer
						
1×	D20 x d9x H31 2×	1×	1×	M8x20 -DIN 7380 2×	M8x45 -DIN 7380 2×	M8-DIN 125 4×

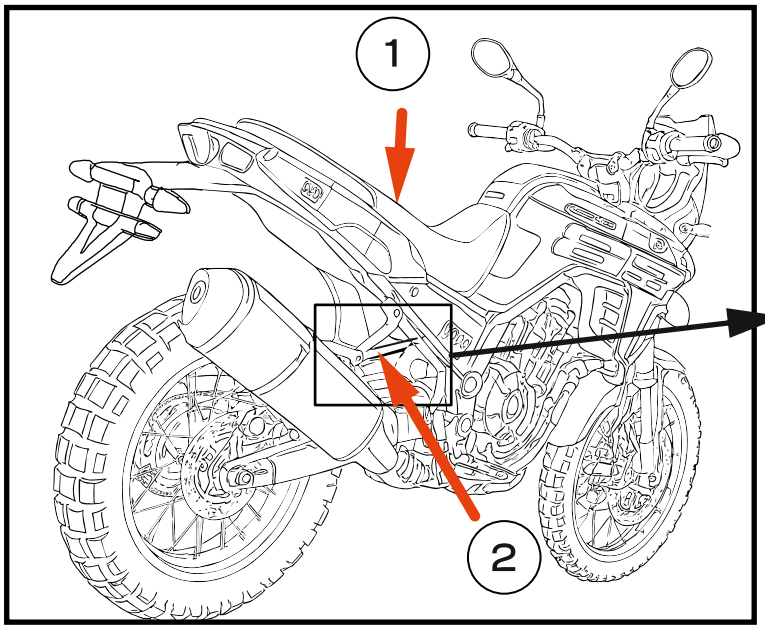

Fig. 2

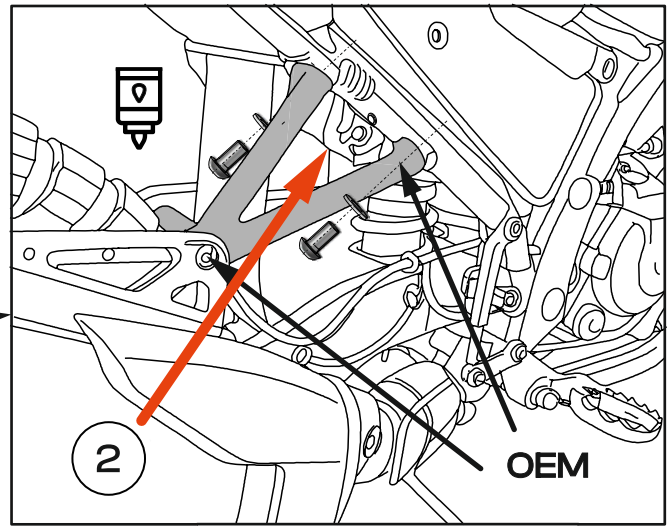

Fig. 3

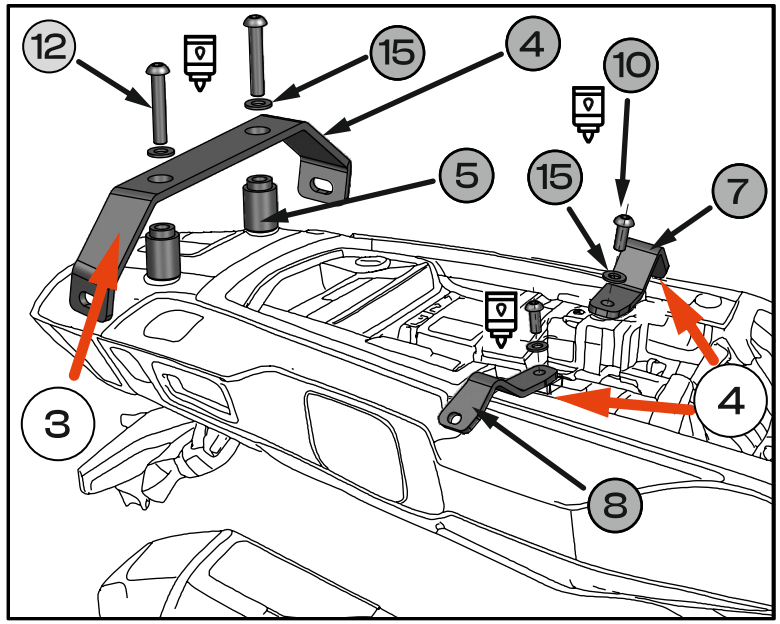

Fig. 4

!!! Initially, attach the screws loosely.
After assembling everything together, tighten them with the appropriate force.

follow yakkexp join #yakkherd

5. Install and loosely fasten the left and right side carriers **[1], [2]** to the rear support bracket **[4]** using bolts **[10],** washers **[15],** and nuts **[14],** and loosely fasten the front section to the brackets using bolts **[9]** and washers **[15]. [Fig. 5]**

6. Install and loosely fasten the right side carrier **[2]** together with the exhaust bracket to the motorcycle mounting points using the original **OEM bolts.** Apply medium-strength threadlocker**. [Fig. 5]**

7. Install and loosely fasten the left side carrier **[1]** to the motorcycle mounting points using bolts [13], washers **[16],** applying spacer **[3].** Apply medium-strength threadlocker**.[Fig. 6]**

8. Install the end cap **[17]** into the tube of the left side carrier **[1]. [Fig. 6]**

17 End cup — 1×

1 Side carrier - Left — 1×

2 Side carrier - Right — 1×

3 Spacer — D17 x d11x H16 — 1×

9 Bolt — M8x16-DIN 7380 — 2×

10 Bolt — M8x20 -DIN 7380 — 2×

13 Bolt — M10x1.25x45 -DIN 961 — 2×

14 Nut — M8-DIN 985 — 2×

15 Washer — M8-DIN 125 — 4×

16 Washer — M10-DIN 125 — 1×

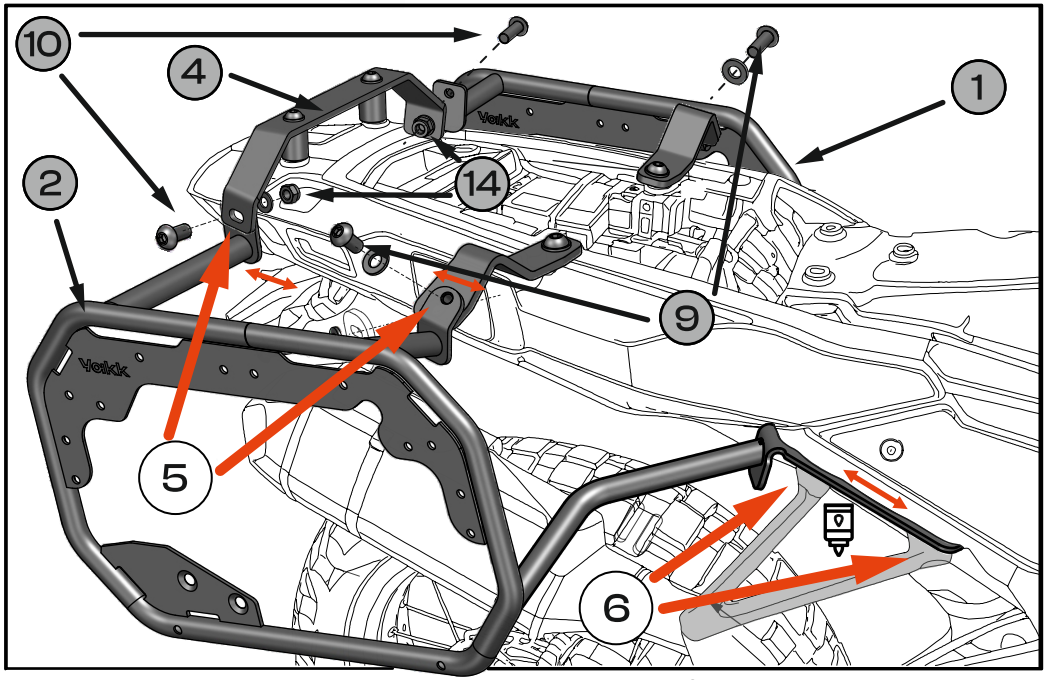

Fig.5

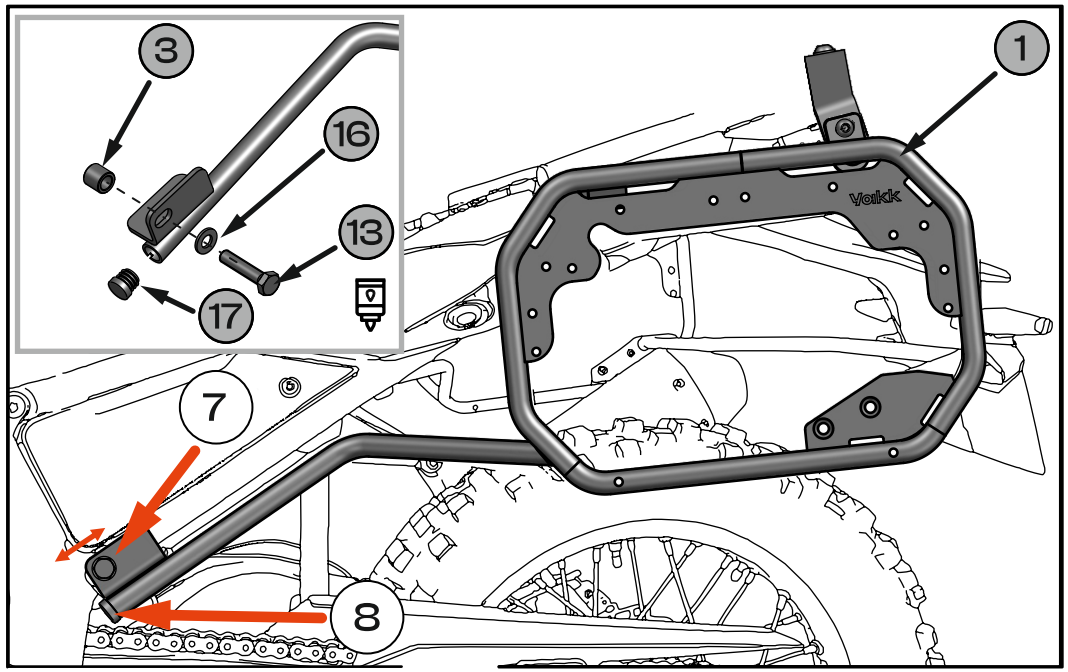

Fig.6

!!! Initially, attach the screws loosely.
After assembling everything together, tighten them with the appropriate force.

9. Loosely fasten the left and right side carriers **[1], [2]** to the center bracket **[6]** ,on both sides using bolt **[11]**, nut **[14],** and washer **[15]. [Fig. 1], [Fig. 7] , [Fig. 8]**

10. Align the **Side Carriers** with the motorcycle centerline. **Tighten all bolts to the specified torque. [Fig.1], [Fig.8],**

11. Resnstall and fasten the seat.

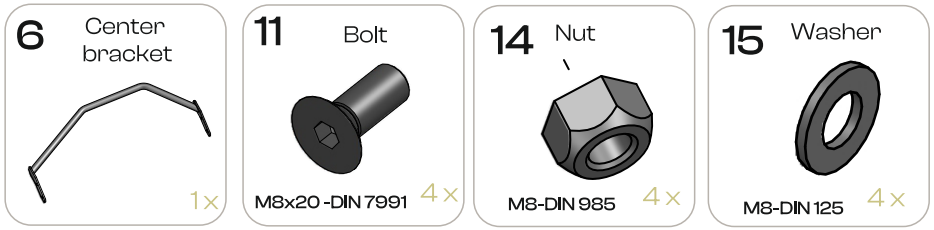

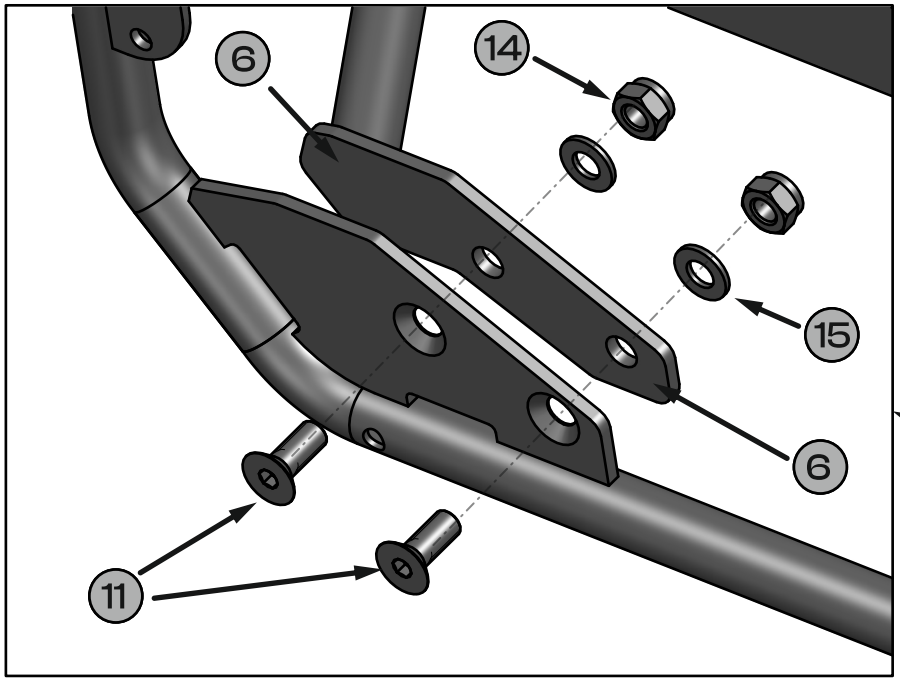

Fig.7

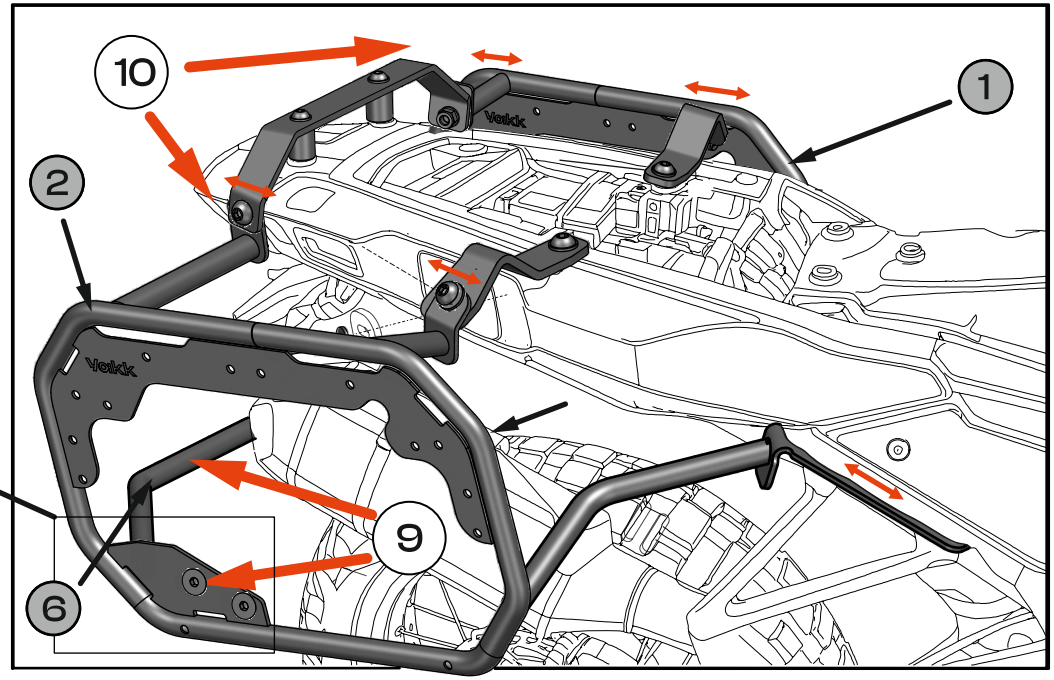

Fig.8

Read before installation.

All bolts have to be finaly tighten after installation all parts on vehicle.

Rear top case rack / Side Carriers

Kove 800X Rally

ID:3077851 / ID:3077852

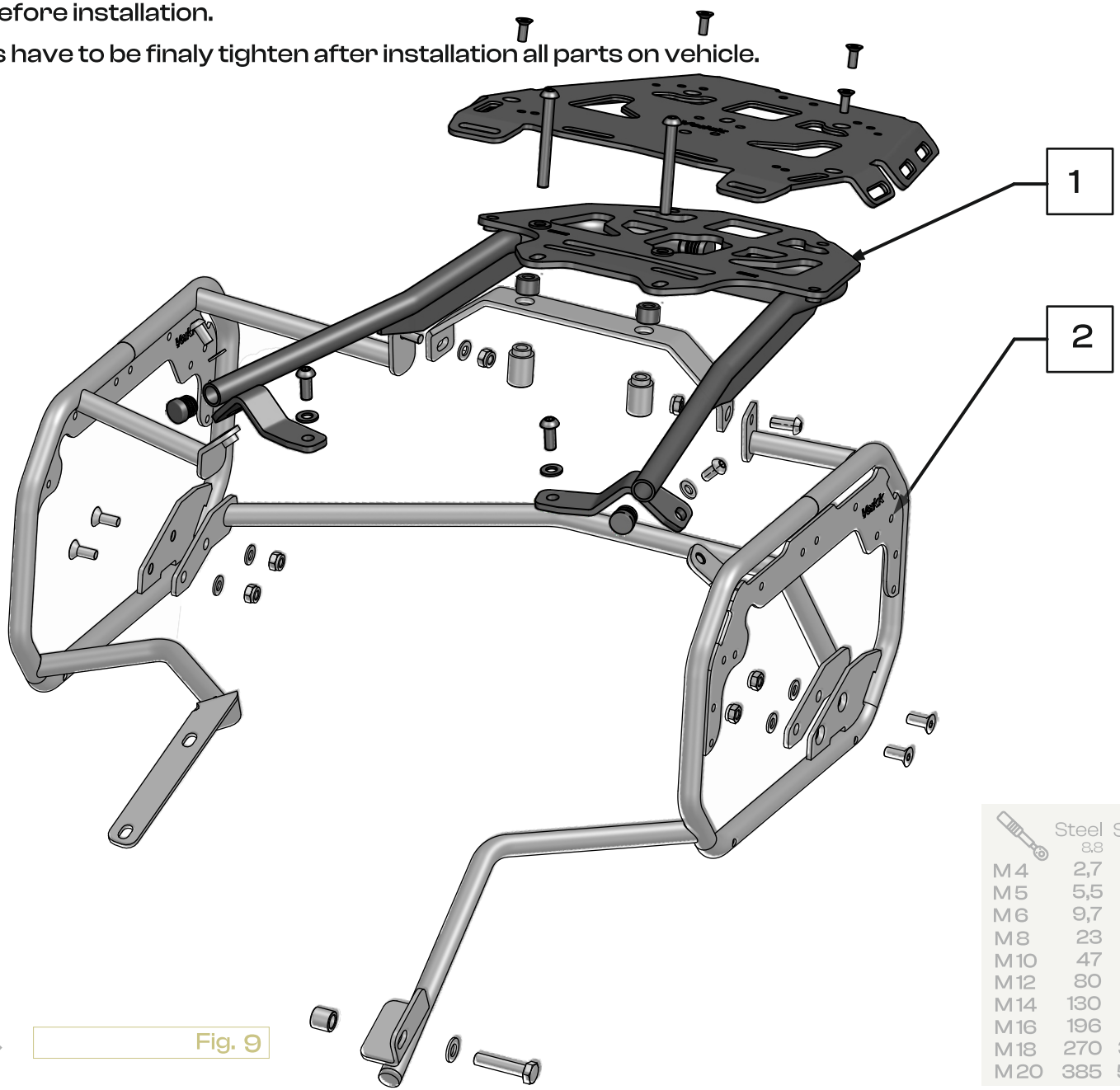

Fig. 9

	Steel 8.8	Steel 10.9	Steel 12.9
M4	2,7	4	4.9
M5	5,5	8	9.8
M6	9,7	13,7	16
M8	23	33	40
M10	47	66	83
M12	80	116	150
M14	130	184	240
M16	196	287	350
M18	270	395	490
M20	385	560	690

1 Yaak exp ID: 3077851

Parts used from product

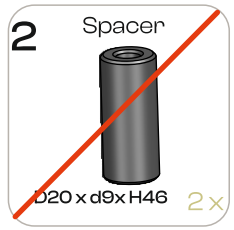

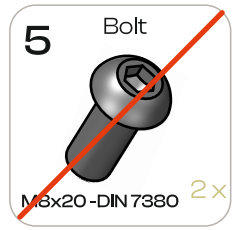

2 Yaak exp ID: 3077852

Parts used from product

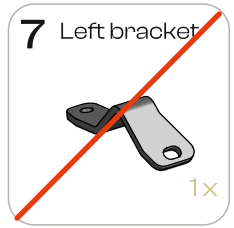







one person | use a medium-stregth | tighten with torque | OEM Original Equipment Manufacturer

Yakk EXP

assembly instructions

yakkexp.com

EXPLORE POSSIBILITIES