Soft luggage rack

# Honda CRF 300 Rally

ID:3016217

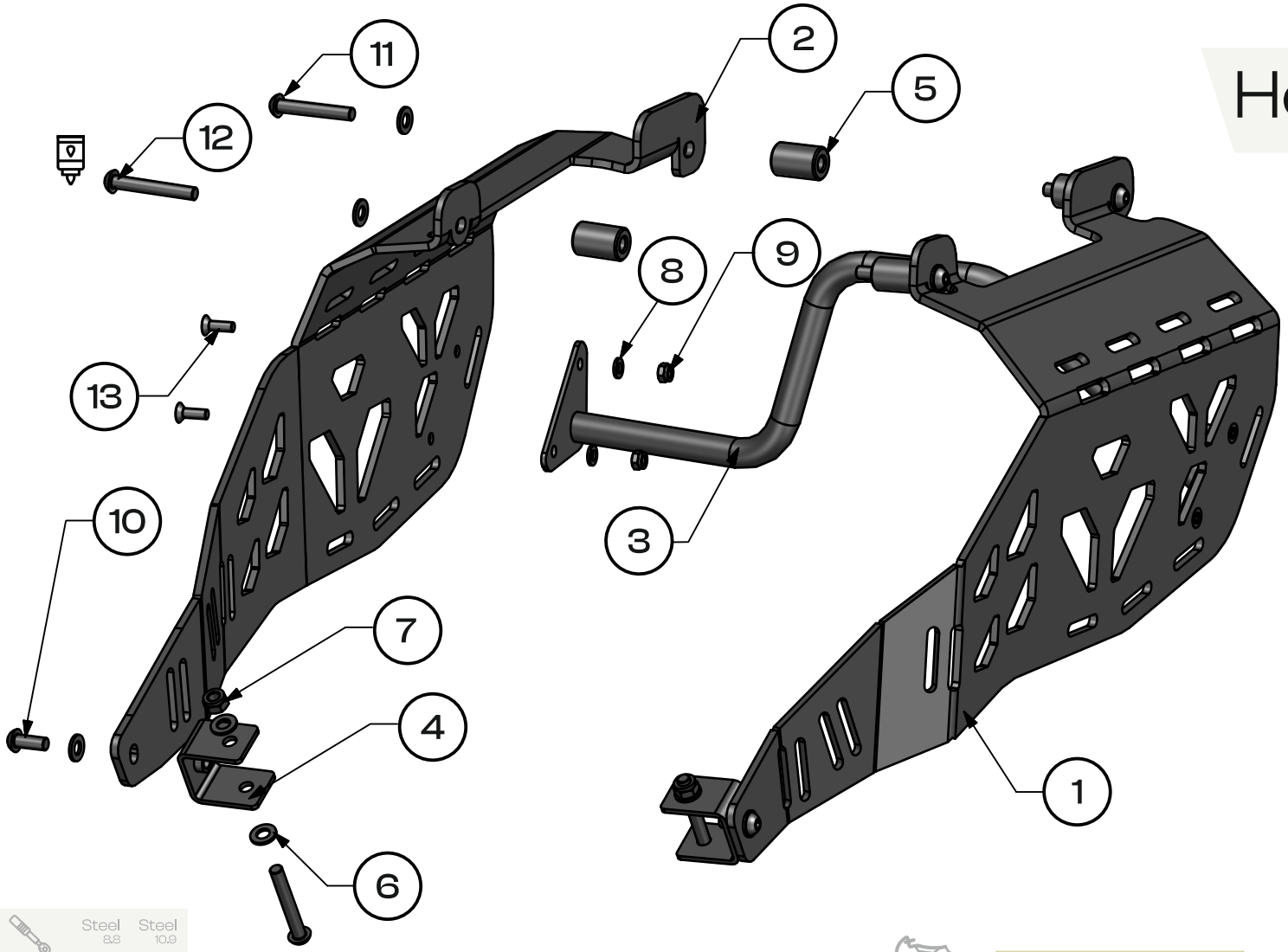


| | Steel 8.8 | Steel 10.9 |
|---|---|---|
| M4 | 2,7 | 4 |
| M5 | 5,5 | 8 |
| M6 | 9,7 | 13,7 |
| M8 | 23 | 33 |
| M10 | 47 | 66 |
| M12 | 80 | 116 |
| M14 | 130 | 184 |
| M16 | 196 | 287 |
| M18 | 270 | 395 |
| M20 | 385 | 560 |

Fig. 1

**Read before installation.**

**All bolts have to be finaly tighten after installation all parts on vehicle.**

When installing the Soft Luggage Rack together with the product Topcase Rack Yakk exp:ID 3066000, replace the spacer sleeve (5) with the shorter spacer.

1 Left luggage rack — 1x



2 Right luggage rack — 1x



3 Central bracket — 1x



4 Bracket — 2x

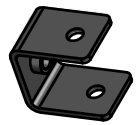

5 Spacer sleeve — 4x

D20 x d8.5 x H30



6 Washer — 10x

M8-DIN 125



7 Nut — 2x

M8-DIN 985



8 Washer — 4x

M6-DIN 125



9 Nut — 4x

M6-DIN 985



10 Bolt — 2x

M8x20 -DIN 7380



11 Bolt — 2x

M8x50 -DIN 7380



12 Bolt — 4x

M8x55 -DIN 7380



13 Bolt — 4x

M6x18-DIN 7991



one person — use a medium-stregth — tighten with torque — OEM Original Equipment Manufacturer

Yakk EXP

assembly instructions

yakkexp.com

**EXPLORE POSSIBILITIES**

Unscrew and dismantle the elements marked as OEM using the appropriate wrenches from the tool set. Unscrew the bolts, remove the muffler cover, dismantle the passenger footrests. This operation requires the removal of side covers, as well as the battery cover and housing. **[Fig.2], [Fig.3],[Fig.4]**




Fig. 2

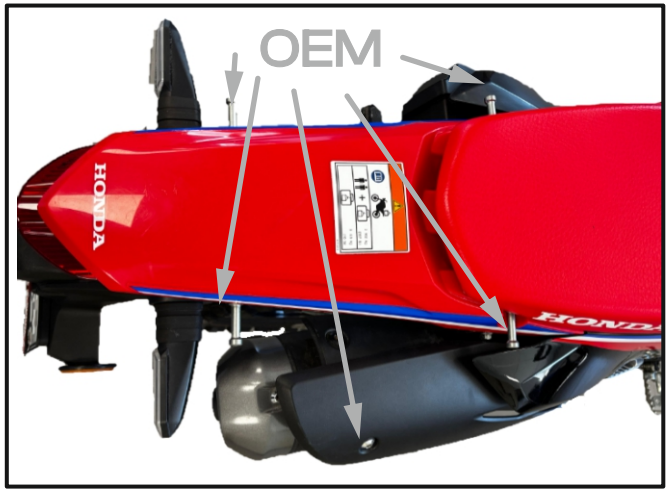


Fig. 3




Fig. 4

**!!! Initially, attach the screws loosely.**
**After assembling everything together, tighten them with the appropriate force.**

Unscrew the bolts, remove the battery cover and housing, and dismantle the passenger footrests.**[Fig. 5], [Fig. 6]**




Fig. 5



Fig. 6

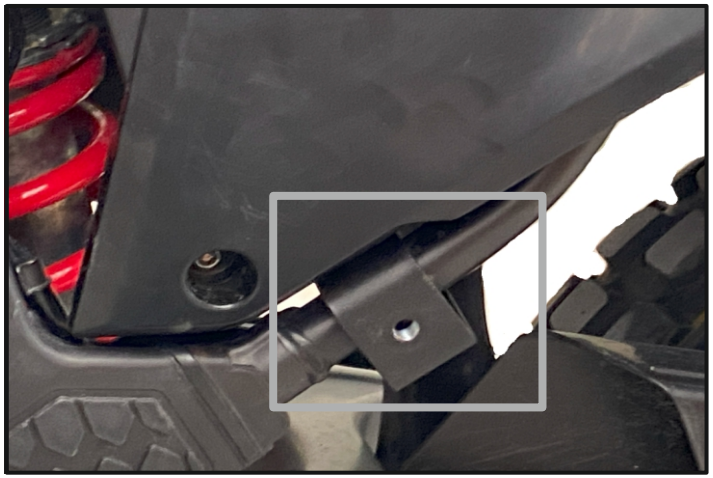

Fig. 7

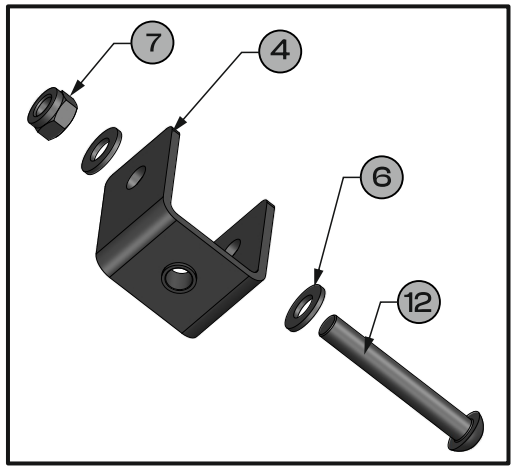


Fig. 8

Replace the passenger footrests with brackets **[4],** using bolt **[12]** inserted through washer **[6],** then secured with nut **[7]** and another washer **[6].** After installing the brackets **[4],** reattach the covers.**[Fig. 7],[Fig. 8]**

**!!! Initially, attach the screws loosely.**
**After assembling everything together, tighten them with the appropriate force.**

lLoosely attach **[1]** the left luggage rack to the motorcycle through the spacer sleeve **[5]** using bolts **[11]** M8x50-DIN 7380 and **[12]** M8x55-DIN 7380 with washers **[6]**. Pay attention to the bolt lengths according to the diagram and the table. Fasten **[1]** to the bracket **[4]** using bolt **[10]** M8x20-DIN 7380 with washer **[6]**. Repeat the process on the other side of the motorcycle for **[2]** the right luggage rack. Apply medium-strength threadlocker.
**[Fig.1],[Fig.9],[Fig.10],[Fig.11]**



Fig. 9

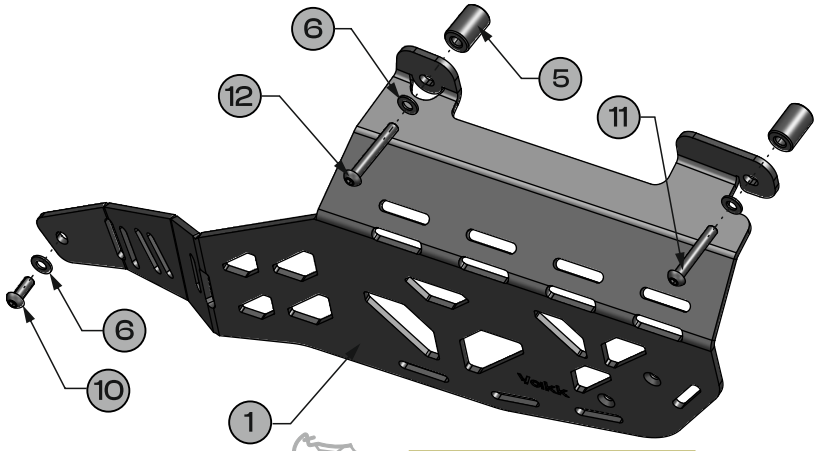


Fig.10




Fig. 11

Bolt together **[1]** the left luggage rack with **[2]** the right luggage rack using the central bracket **[3]** and bolt **[13]** M6x18-DIN 7991, through nut **[9]** M6-DIN 985 and washer **[8]**. Align all parts properly and tighten everything with the appropriate torque.
**[Fig.1],[Fig.12,[Fig.10],[Fig.13]**

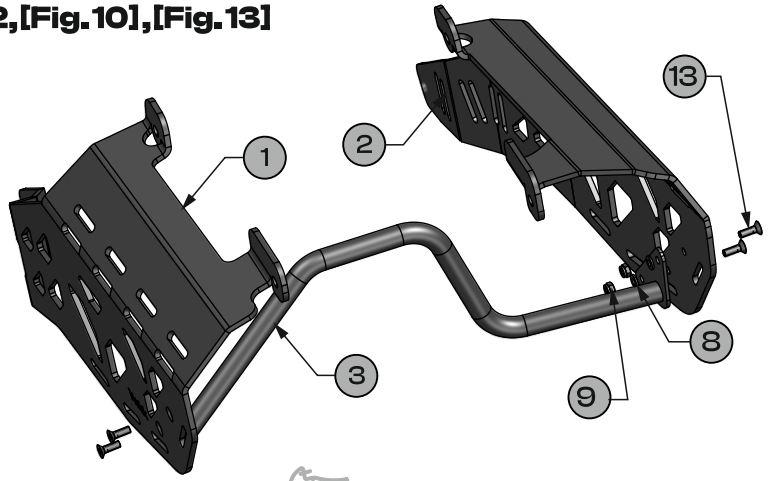


Fig. 12



Fig. 13