Skid plate black

SUZUKI DL 650 V Strom XT

ID:2984563

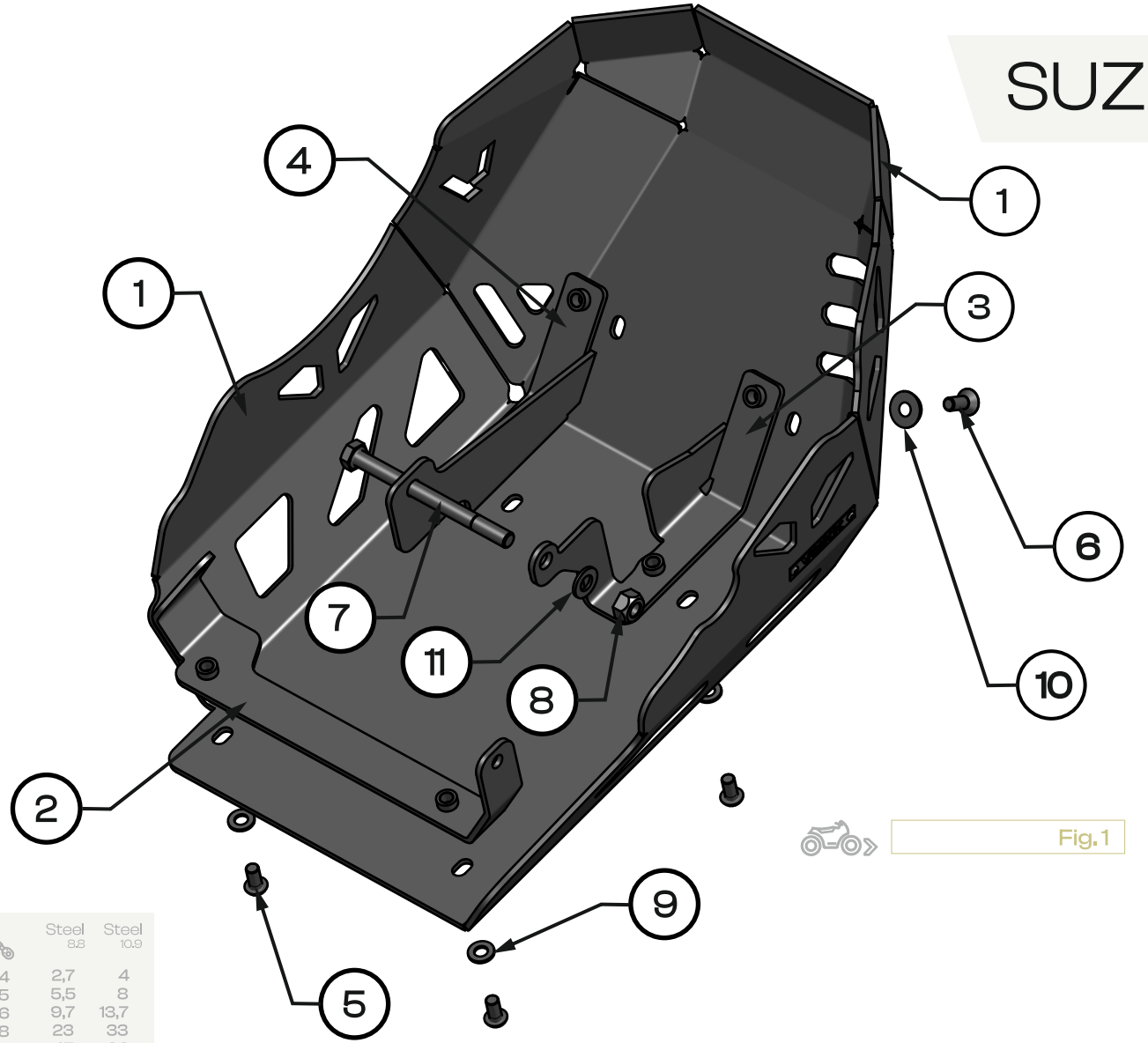

Fig.1

	Steel 8.8	Steel 10.9
M4	2,7	4
M5	5,5	8
M6	9,7	13,7
M8	23	33
M10	47	66
M12	80	116
M14	130	184
M16	196	287
M18	270	395
M20	385	560

1 Engine guard — 1x

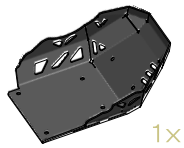

2 Rear central bracket — 1x



3 Right bracket — 1x



4 Left bracket — 1x



5 Bolt — M8x16 -DIN 7380 — 4x



6 Bolt — M8x20 -DIN 7991 — 2 x



7 Bolt — M10x120 -DIN 4014 — 1x

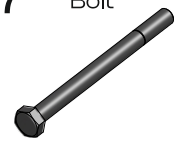

8 Nut — M10-DIN 985 — 2 x



9 Washer — M8-DIN 125 — 4 x



10 Washer — M8 -DIN 9081 — 2 x



11 Washer — M8-DIN 125 — 1x



Read before installation.

All bolts have to be finaly tighten after installation all parts on vehicle.

one person — use a medium-stregth — tighten with torque — OEM Original Equipment Manufacturer

Yakk EXP

assembly instructions

yakkexp.com

EXPLORE POSSIBILITIES

Read before installation.

All bolts have to be finaly tighten after install ation all parts on vehicle.

follow yakkexp join #yakkherd

Remove the bolt marked as OEM in **[Fig. 2]** using the appropriate wrenches from the tool set. Attach the Left and Right Bracket **[3], [4]** to the motorcycle using bolt M10x120 **[4]**, Washer **[11],** and Nut M10 **[8]. [Fig. 1], [Fig. 3]**, **[Fig. 4]** Attach the Rear Rentral Bracket **[2]** to the motorcycle using the original bolts.**[Fig. 1], [Fig. 5]** Apply medium-strength threadlocker.

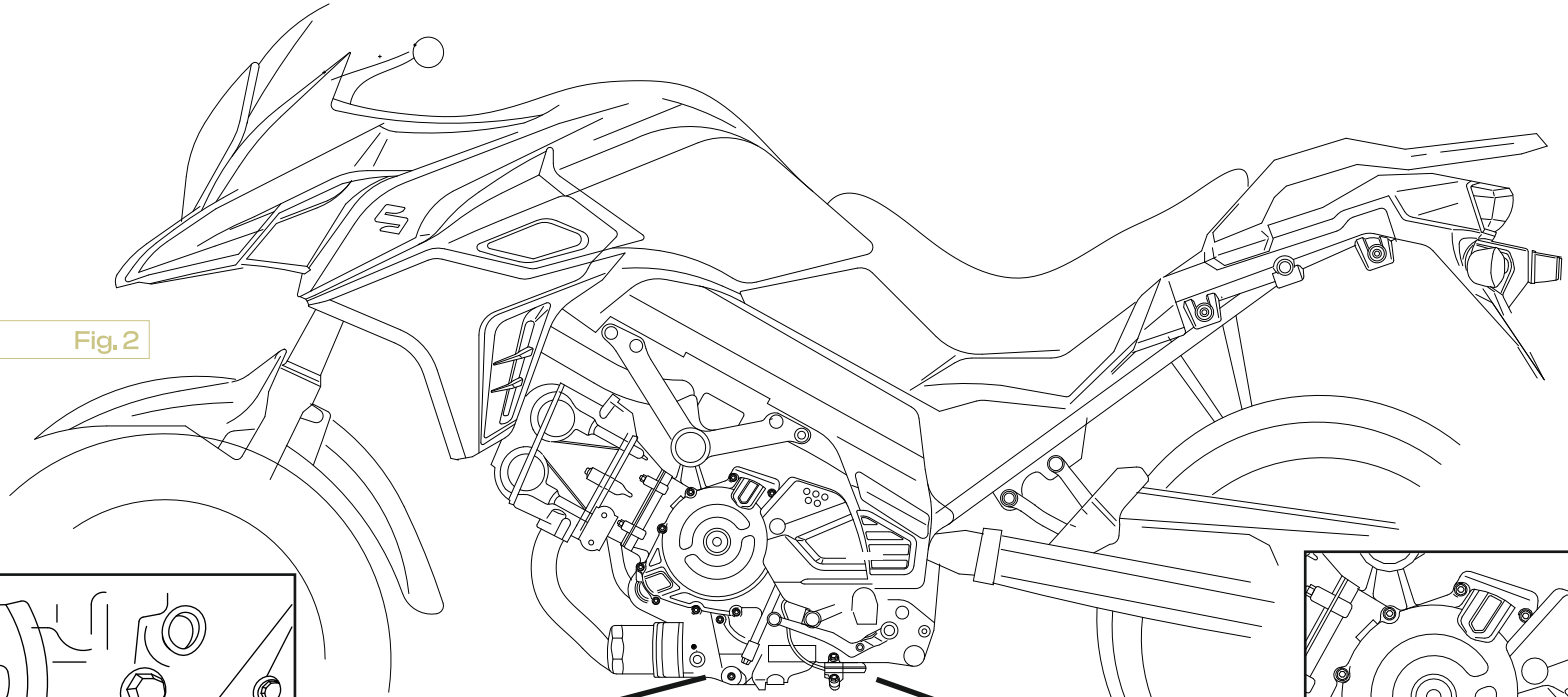

Fig. 2

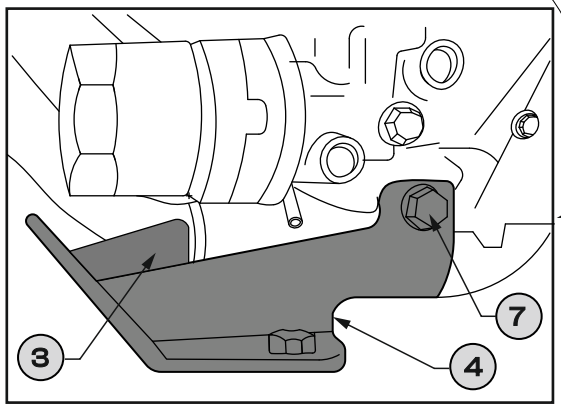

Fig. 3

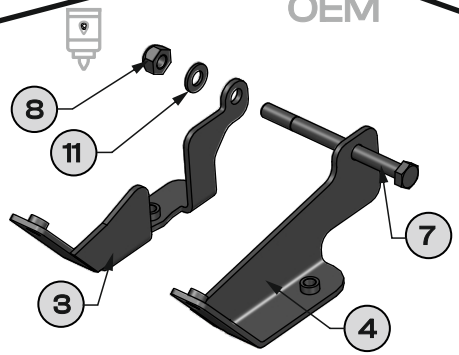

Fig. 4

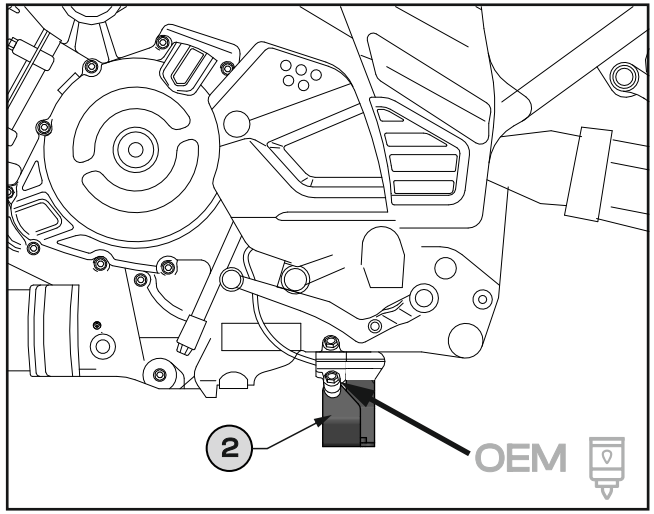

Fig. 5

one person | use a medium-stregth | tighten with torque | **OEM** Original Equipment Manufacturer

Read before installation.
All bolts have to be finaly tighten after install ation all parts on vehicle.

follow yakkexp join #yakkherd

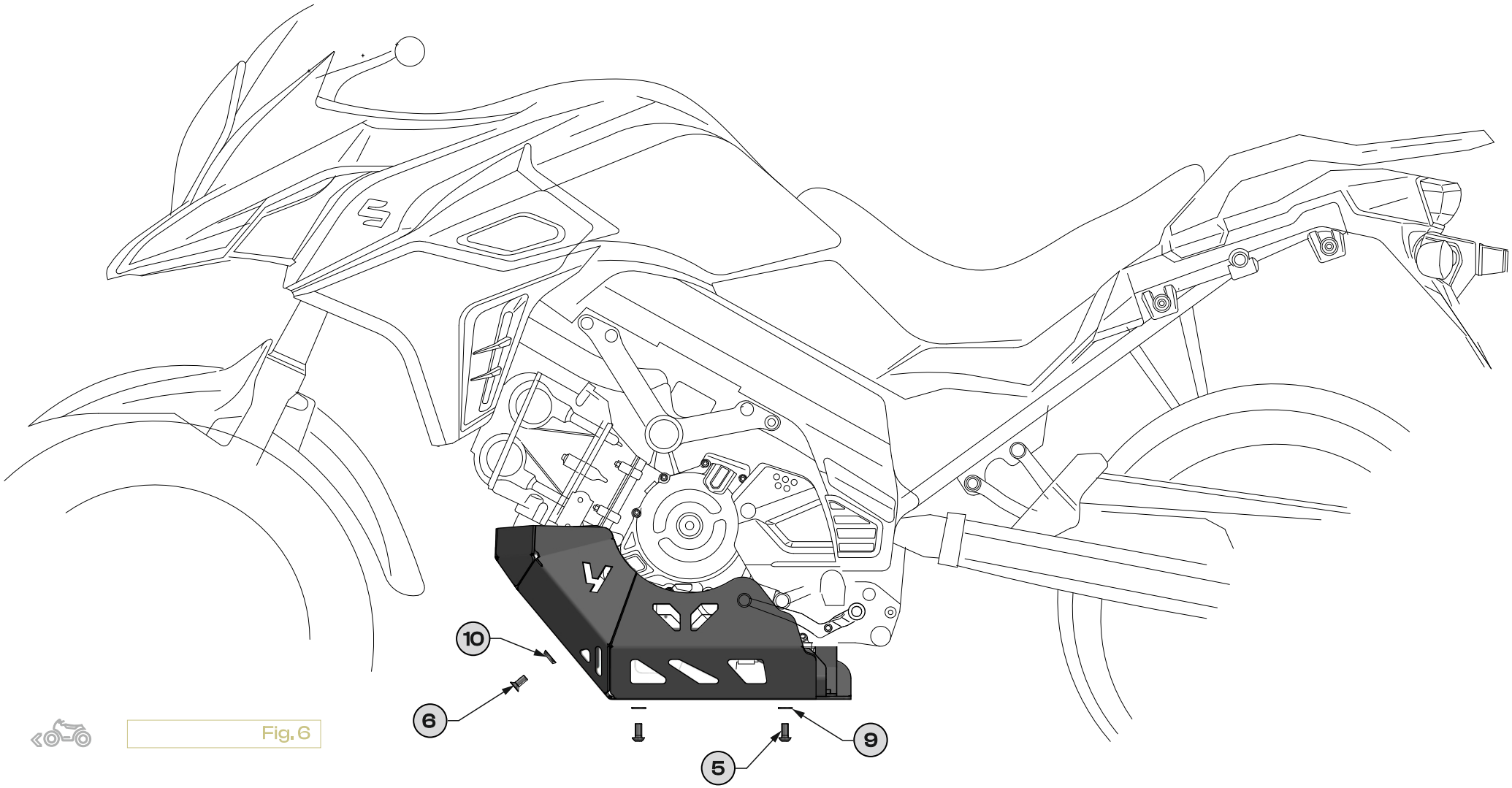

Fig. 6

Mount the engine guard **[1]** and loosely fasten it with M8x20 bolts **[6]** to the Right Bracket **[3]** and Left Bracket **[4].** Then fasten it to the Rear Central Bracket **[2]** using bolts M8x16 **[5]** and washers **[9].** Finally, tighten all bolts to the recommended torque using medium-strength threadlocker.**[Fig.1], [Fig.6]**

one person | use a medium-stregth | tighten with torque | OEM Original Equipment Manufacturer