Soft luggage side racks

KTM 790 890

ID:3016262

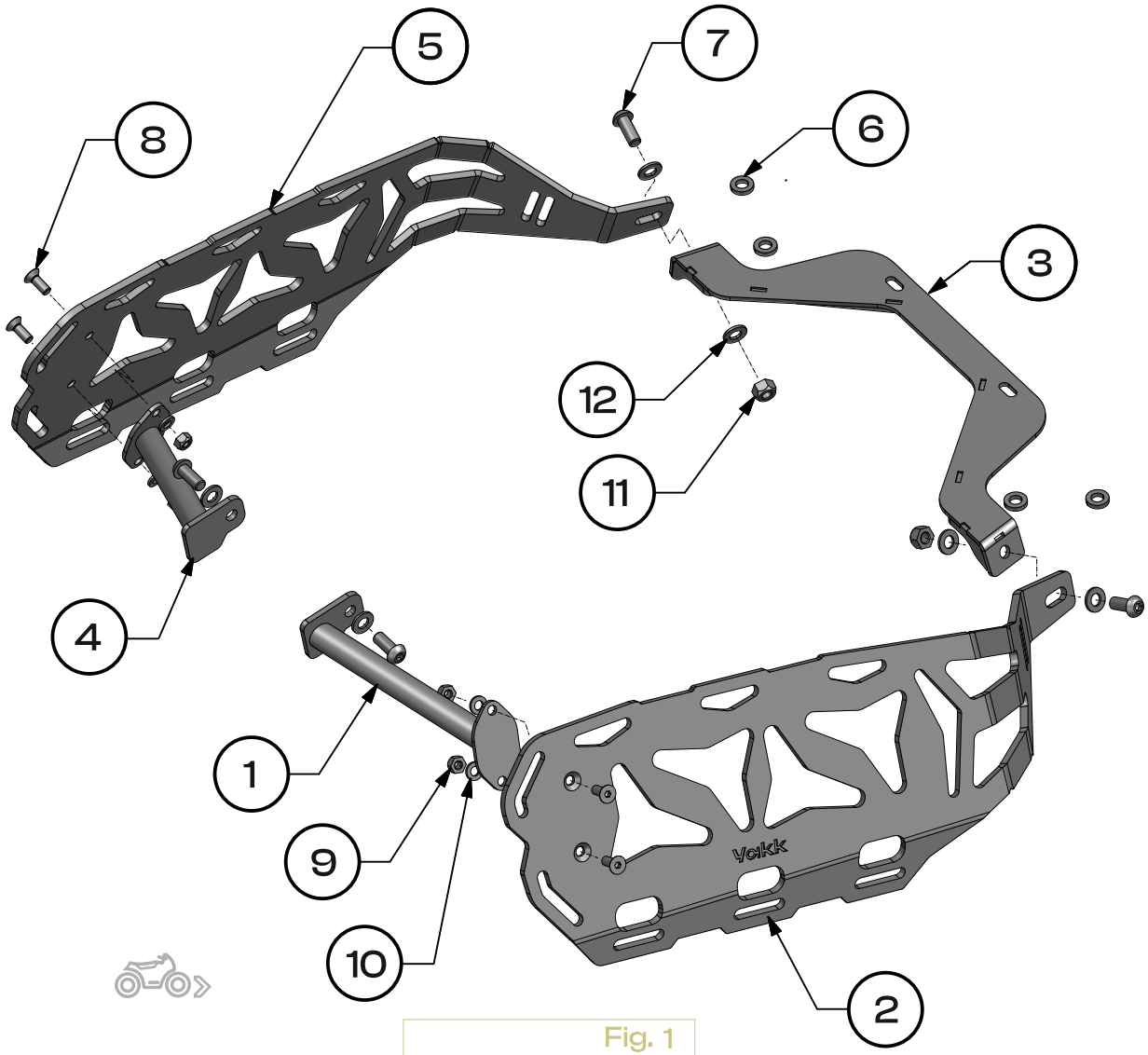

Fig. 1

1 Right bracket  1x	2 Luggage plateer - right 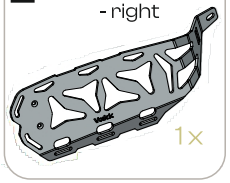 1x	3 Central bracket 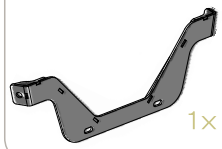 1x	4 Left bracket  1x
5 Luggage plateer - Left 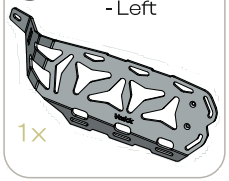 1x	6 Washer  4x d8xD15xH3	7 Bolt  4x M8x20-DIN 34805	8 Bolt  4x M6x16-DIN 7991
9 Washer  4x M6-DIN 125	10 Washer  4x M6-DIN 125	11 Nut  2x M8 DIN 985	12 Washer  6x M8-DIN 125

	Steel 8.8
M4	2,7
M5	5,5
M6	9,7
M8	23,0
M10	47,0
M12	80,0
M14	130,0
M16	196,0
M18	270,0
M20	385,0

Read before installation.
All bolts have to be finaly tighten after installation all parts on vehicle.

one person | use a medium-stregth | tighten with torque | OEM Original Equipment Manufacturer

Using the appropriate tool, unscrew the bolts securing the rear passenger footpegs. Then, carefully insert central bracket **(3)** and reattach the footpegs using additional washers **(6)** and the original bolts **OEM.**
Use medium-strength adhesive. **[Fig.1], [Fig.2], [Fig.4]**

!!! The removal of the rear passenger footpegs requires the removal of the exhaust.

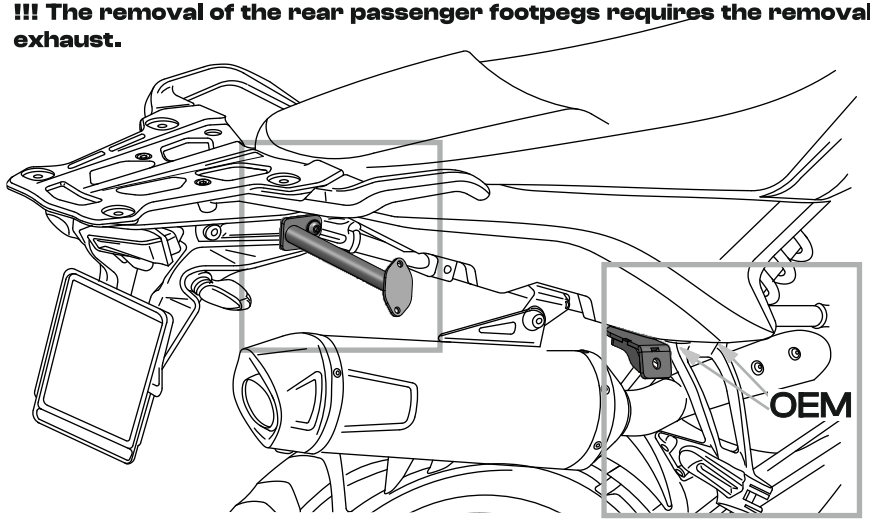

Fig.2

Attach the right bracket to the motorcycle mount using bolt **(7)** through washer **(12).** Repeat the procedure for the other side of the motorcycle by attaching the left bracket **(4). [Fig. 1], [Fig. 2] , [Fig. 3]**

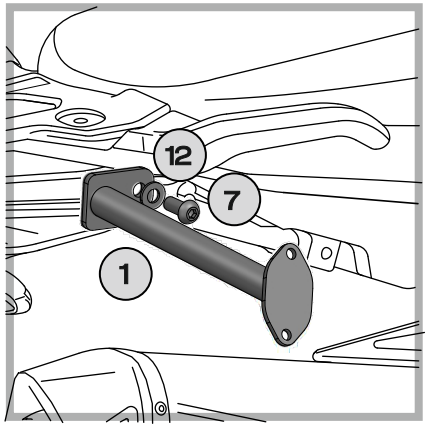

Fig. 3

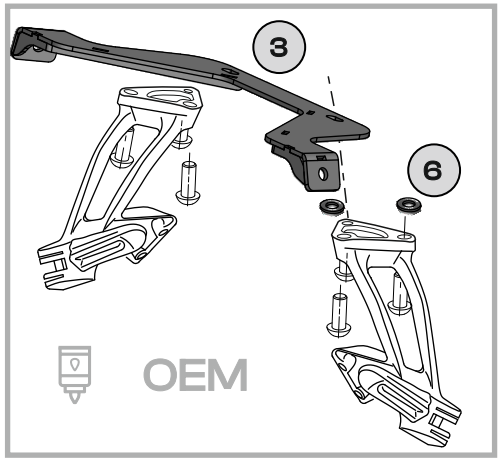

Fig. 4

Loosely attach the Luggage Plate – Right **(2)** to Bracket **(1)** using bolts **(8),** securing them with nuts **(9)** and washers **(10).** Then, loosely attach the Luggage Plate – Right **(2)** to the Central Bracket **(3)** using bolt **(7),** along with washers **(12)** and nut **(11).** Repeat the procedure for the other side of the motorcycle.

Finally, tighten all connections securely. **[Fig.1], [Fig.5]**

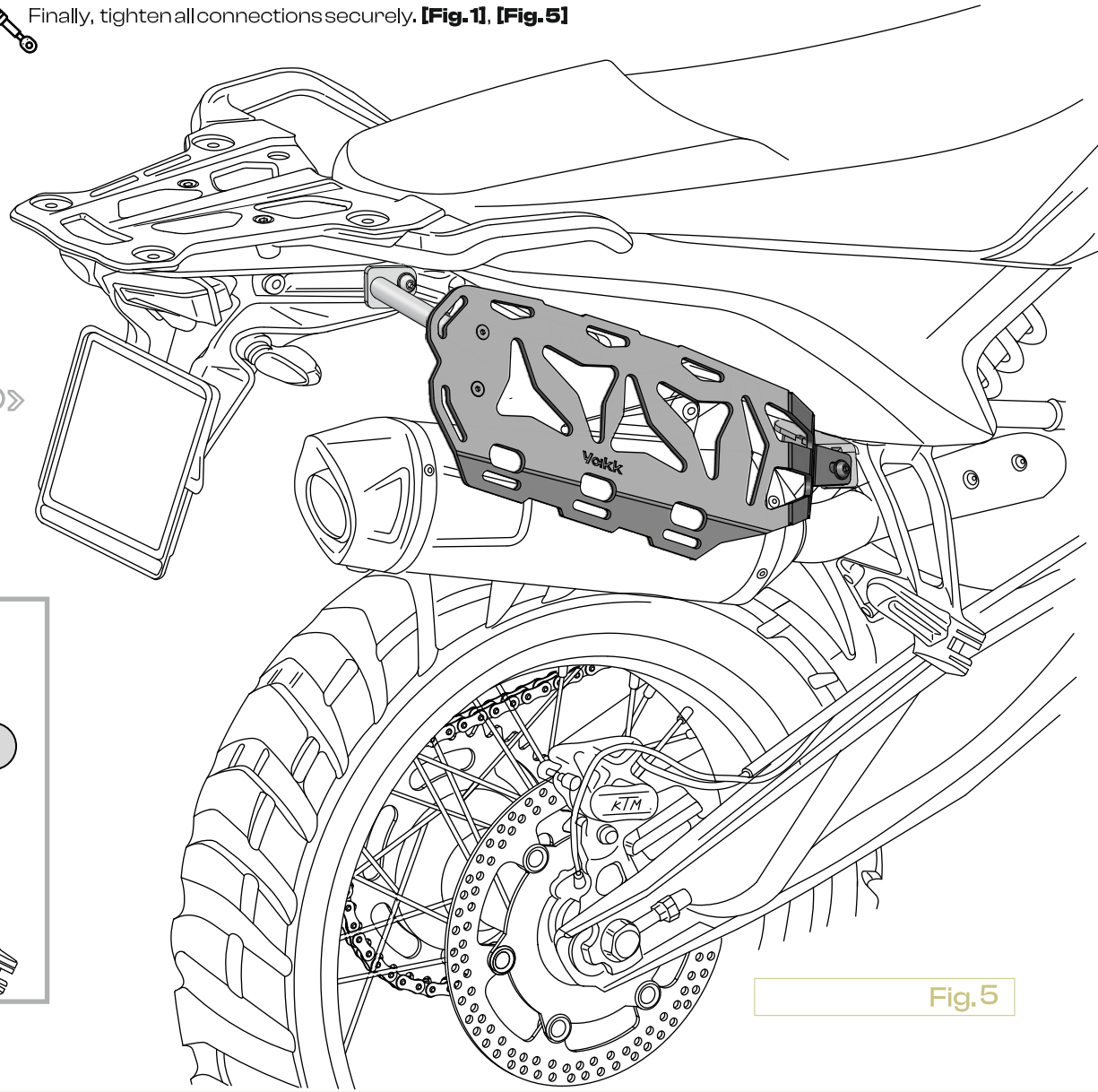

Fig.5