Soft luggage rack

BMW 900 GS

ID:3058460

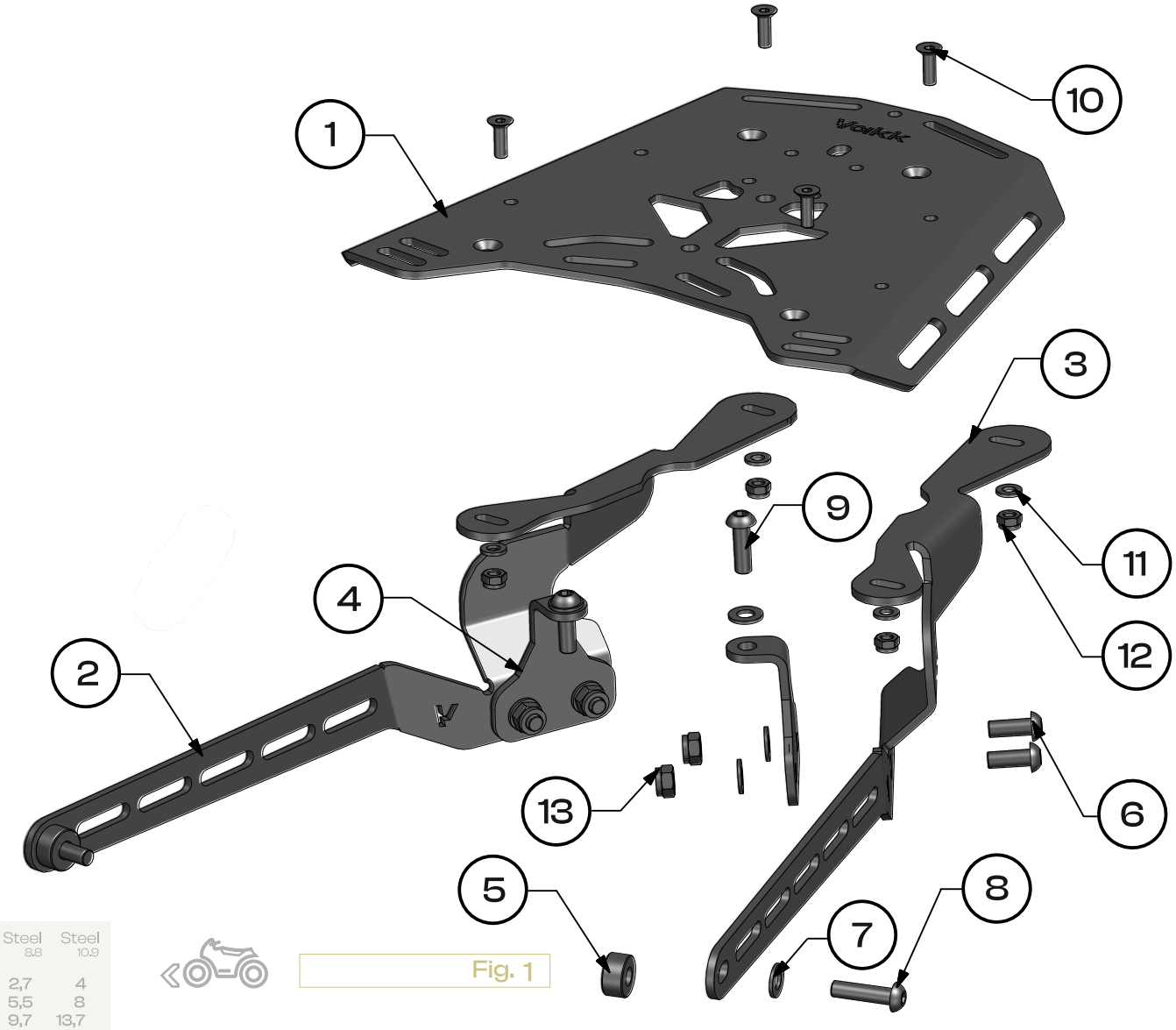

Fig. 1

	Steel 8.8	Steel 10.9
M4	2,7	4
M5	5,5	8
M6	9,7	13,7
M8	23	33
M10	47	66
M12	80	116
M14	130	184
M16	196	287
M18	270	395
M20	385	560

Read before installation.

All bolts have to be finaly tighten after installation all parts on vehicle.

one person | use a medium-stregth | tighten with torque | OEM Original Equipment Manufacturer

1 Luggage plate — 1×

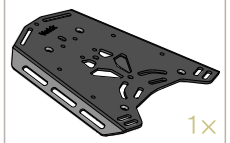

2 Right bracket — 1×



3 Left bracket — 1×

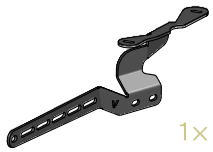

4 Bracket — 2×

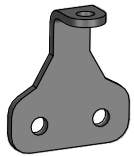

5 Spacer sleeve — 2×

D20 x H10 x d9



6 Bolt — 4×

M8x20-DIN 7380



7 Washer — 8×

M8-DIN 125



8 Bolt — 2×

M8x30 -DIN 7380



9 Bolt — 2×

M8x25 -DIN 7380



10 Bolt — 4 ×

M6x18 -DIN 7991



11 Washer — 4×

M6-DIN 125



12 Nut — 4 x

M6-DIN 985



13 Nut — 4×

M8-DIN 985



Vakk EXP

assembly instructions

yakkexp.com

EXPLORE POSSIBILITIES

!!! Initially, attach the screws loosely. After assembling everything together, tighten them with the

Remove the seat, the plastic side cover, and the passenger footpegs **(OEM).**Attach part **[4]** (Bracket) to the motorcycle frame using bolt **[9]** (Bolt M8x25 DIN 7380) through washer **[10]** (Washer M8 DIN 125) **[Fig.1], [Fig.2].**

Mount the OEM cover **[Fig.3]**.
Attach mounting brackets **[2]** (Right bracket) and **[3]** (Left bracket) to part **[4]** (Bracket) using bolt **[9]** (Bolt M8x25 DIN 7380), together with washers **[10]** (Washer M8 DIN 125) and nuts **[13]** (Nut M8 DIN 985). Mount parts **[2]** (Right bracket) and **[3]** (Left bracket) to the motorcycle frame using spacer **[5]** (Spacer sleeve D20 × H10 × Ø8).Fasten them with bolt **[8]** (Bolt M8x30 DIN 7380) through washer **[7]** (Washer M8 DIN 125). **[Fig.1]**. **[Fig.2]**.

Use medium-strength threadlocker.

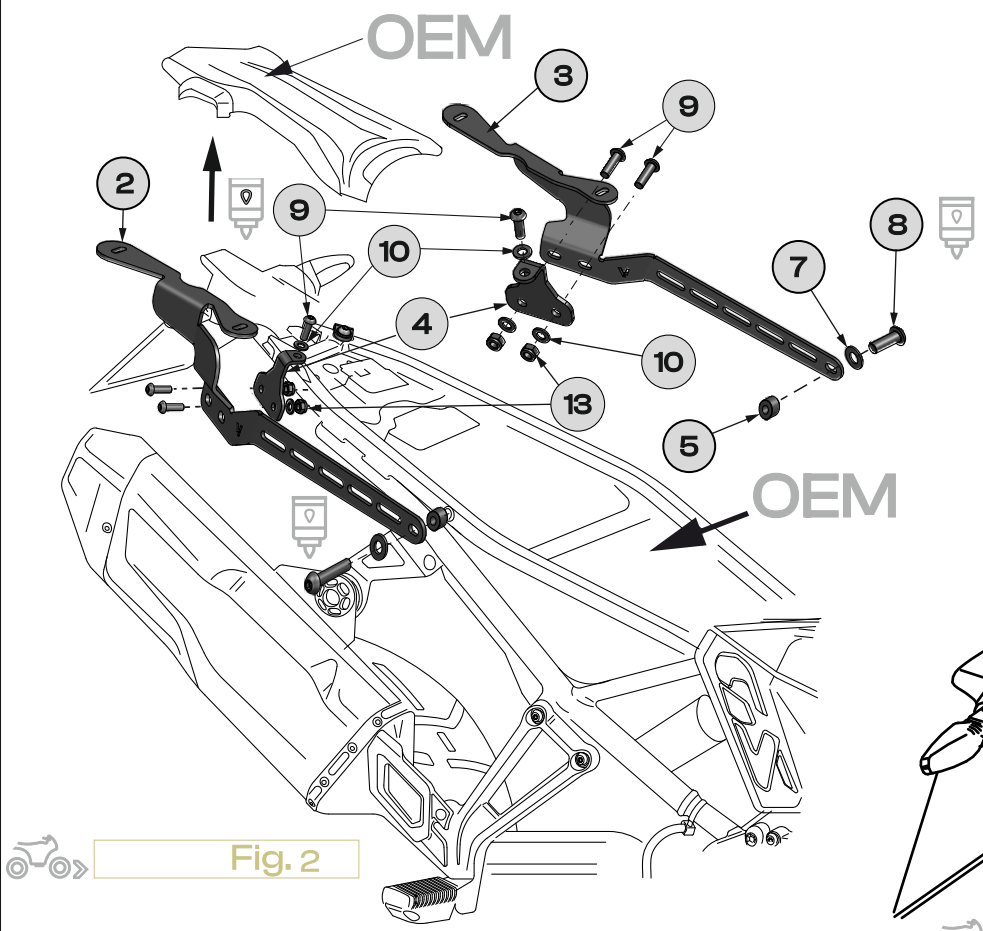

Fig. 2

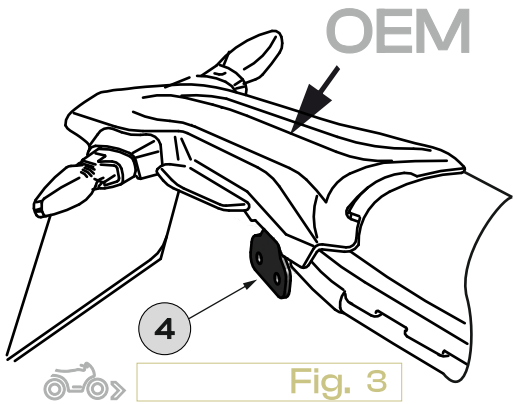

Fig. 3

Mount part **[1]** (Luggage plate) by fastening it to parts **[3]** (Left bracket) and **[2]** (Right bracket) using bolts **[10]** (Bolt M6x18 DIN 7991).Tighten bolts **[10]** through washers **[11]** (Washer M6 DIN 125). **[Fig.1]**. **[Fig.4]**.

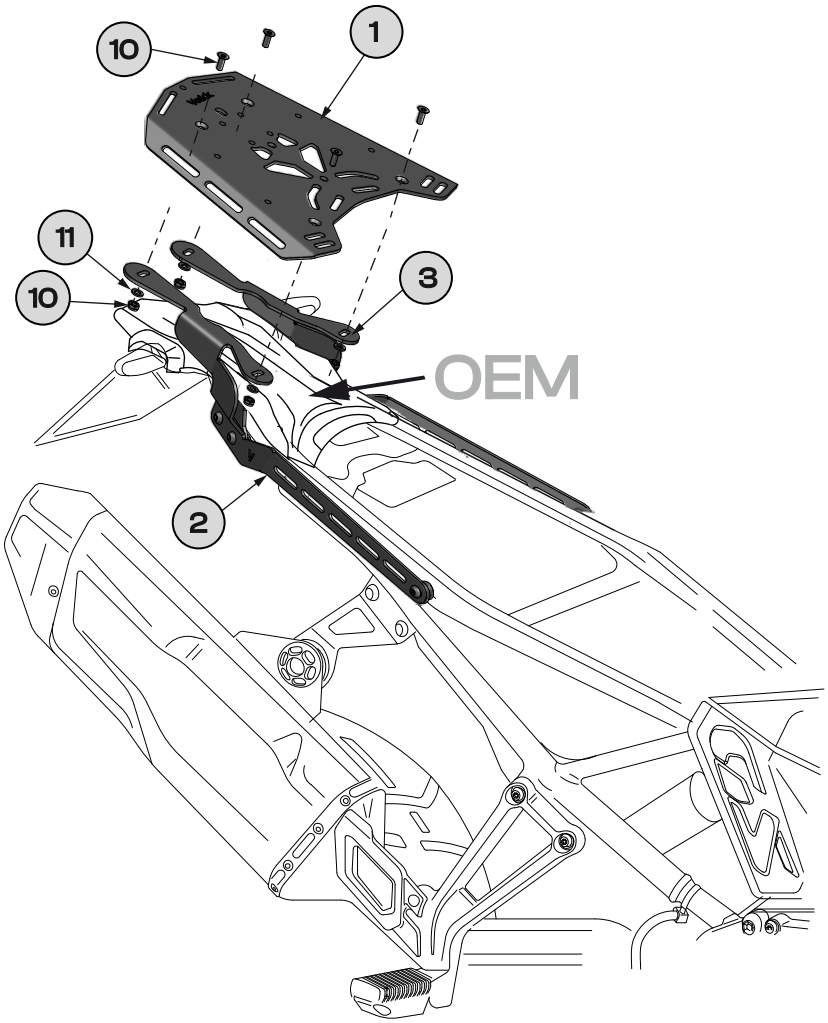

Fig. 4