Soft luggage rack

BMW 900 GS

ID:3059955

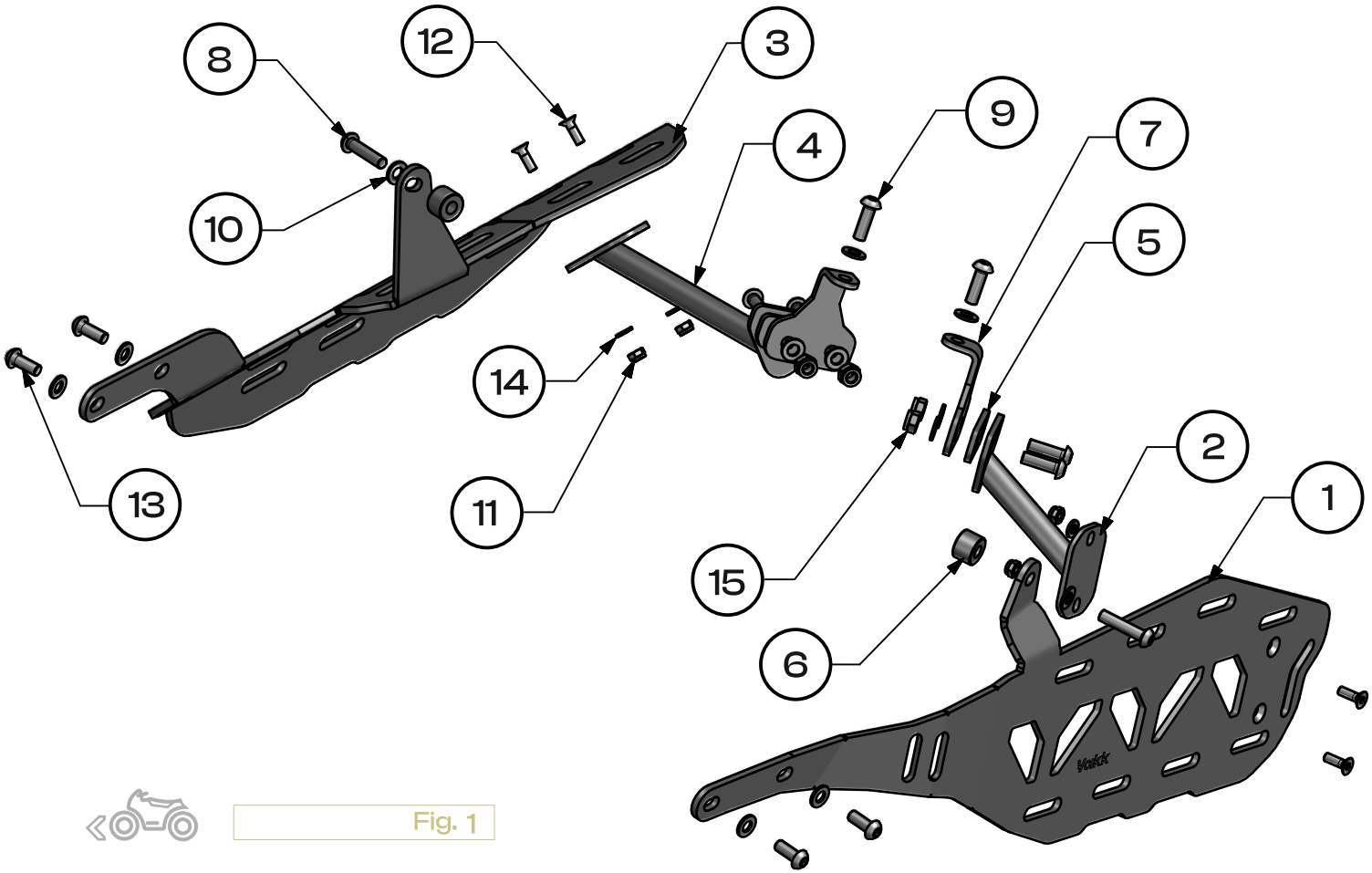

Fig. 1

	Steel 8.8	Steel 10.9
M4	2,7	4
M5	5,5	8
M6	9,7	13,7
M8	23	33
M10	47	66
M12	80	116
M14	130	184
M16	196	287
M18	270	395
M20	385	560

Read before installation.

All bolts have to be finaly tighten after installation all parts on vehicle.

When installing the Soft Luggage Rack together with the Luggage Rack product ID 3058460, attach parts (4) and (2) to the motorcycle through part (7), omitting part (5), and instead fasten through the mounting plate of product ID 3058460 . and , replace the spacer sleeve (6) with the shorter spacer.

one person | use a medium-stregth | tighten with torque | OEM Original Equipment Manufacturer

1 Left luggage rack 1x	2 Left bracket 1x	3 Right luggage rack 1x
4 Right bracket 1x	5 Spacer plate 2x	6 Spacer sleeve D20 x H14 x d9 2x
7 Bracket 2x	8 Bolt 2x M8x35 -DIN 7380	9 Bolt 6x M8x25 -DIN 7380
10 Washer 12 x M8-DIN 125	11 Nut 4 x M6-DIN 985	12 Bolt 4 x M6x18-DIN 7991
13 Bolt 4 x M8x20-DIN 7380	14 Nut 4 x M6-DIN 125	15 Nut 4 x M8-DIN 985

Yakk EXP

assembly instructions

yakkexp.com

EXPLORE POSSIBILITIES

!!! Initially, attach the screws loosely.
After assembling everything together, tighten them with the appropriate force.

follow yakkexp join #yakkherd

Remove the seat, the plastic side cover, and the passenger footpegs **(OEM)**.

Attach the bracket **(7)** to the motorcycle using bolt **(9)** and washer **(10)**.
Attach the right bracket **(4)** together with the spacer plate **(5)** to the bracket **(7)** using bolt **(9)**, washer **(10)**, and nut **(15)**.
Repeat the same procedure on the opposite side by installing the left bracket **(2)**.
Use medium-strength adhesive. **[Fig. 1], [Fig. 2],**

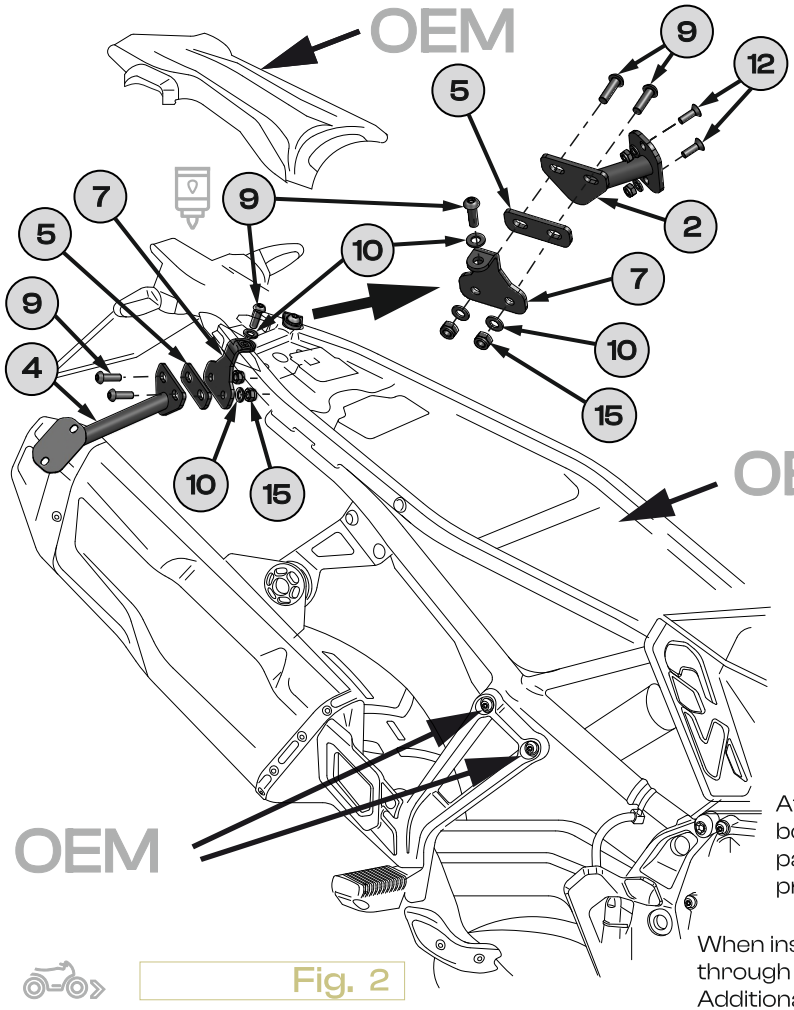

Fig. 2

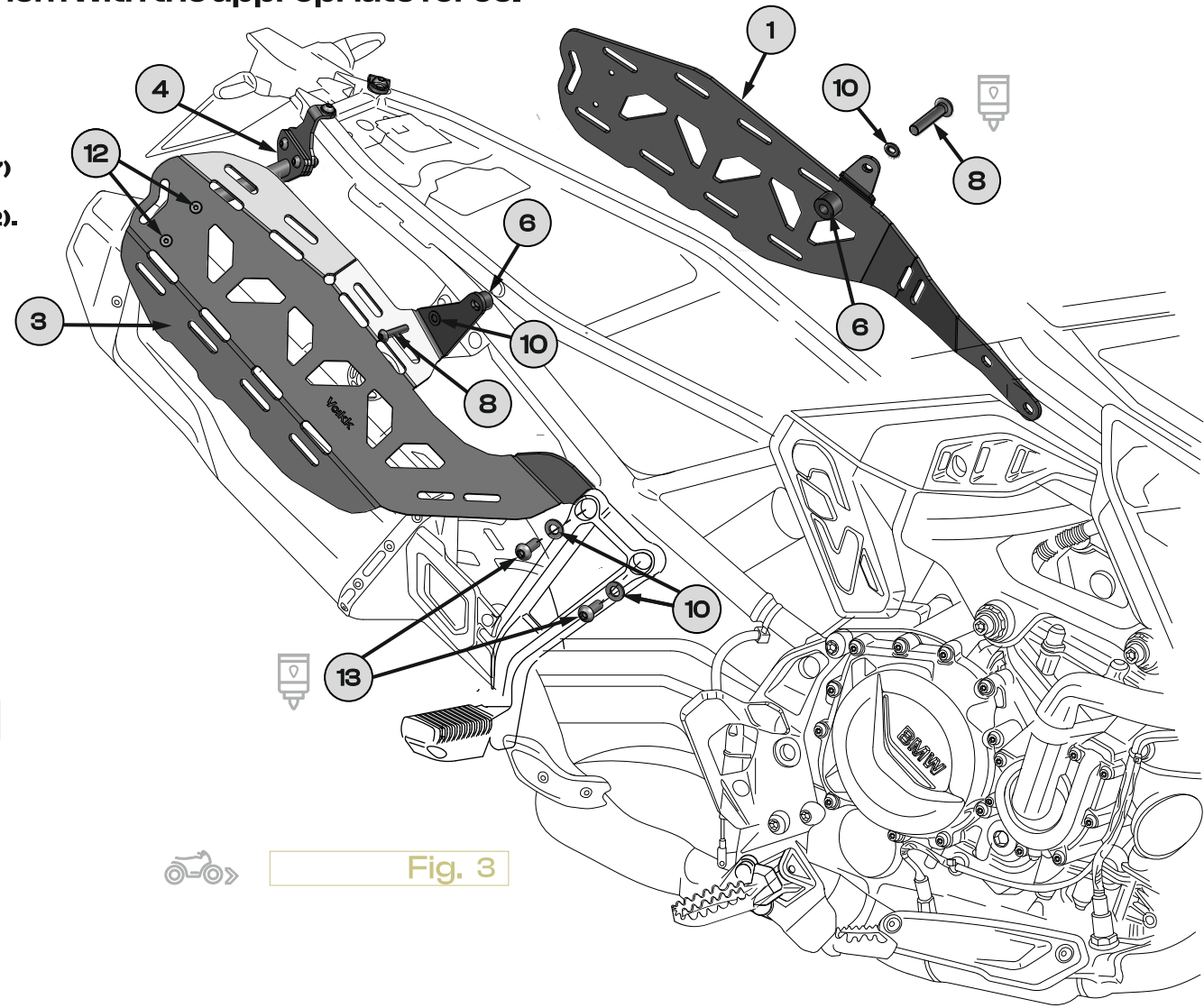

Fig. 3

Attach the right luggage rack **(3)** to the right bracket **(4)** using bolt **(12)**, tightening it with nut **(14)** through washer **(11)**. Next, insert bolt **(8)** through washer (10) and the spacer sleeve **(6)**. Then fasten using bolts **(13)** through washers **(10)** and the original passenger footpeg mounts, clamping down the right luggage rack **(3)**. Use medium-strength adhesive.. Repeat the same procedure on the other side of the motorcycle by attaching the left luggage rack (1) to the left bracket **(2)**. **[Fig. 1], [Fig. 3],**

When installing the Soft Luggage Rack together with the "Luggage Rack" product ID 3058460, attach parts 4 and 2 to the motorcycle through part 7, omitting part 5, and instead fasten through the mounting plate of product ID 3058460.
Additionally, replace the spacer sleeve (6) with the shorter spacer included in product ID 3058460.